Arcled8107q

ORDER CODE: ARCLED8107QIP



VERSIONS

	Code	Connections	IP rate
	**ARCLED8107QIP**	**IPCON**	**IP67**
	ARCLED8107QTZ	Neutrik	IP54

ACCESSORIES & RELATED PRODUCTS



FCL8107
Flight case for 8 pcs of ARCLED8107Q,
dimensions: 780x540x480 mm

Downloaded on 29/11/2026 - data may be provisional: features, specifications and appearance are subject to change without notice

TECHNICAL DRAWINGS

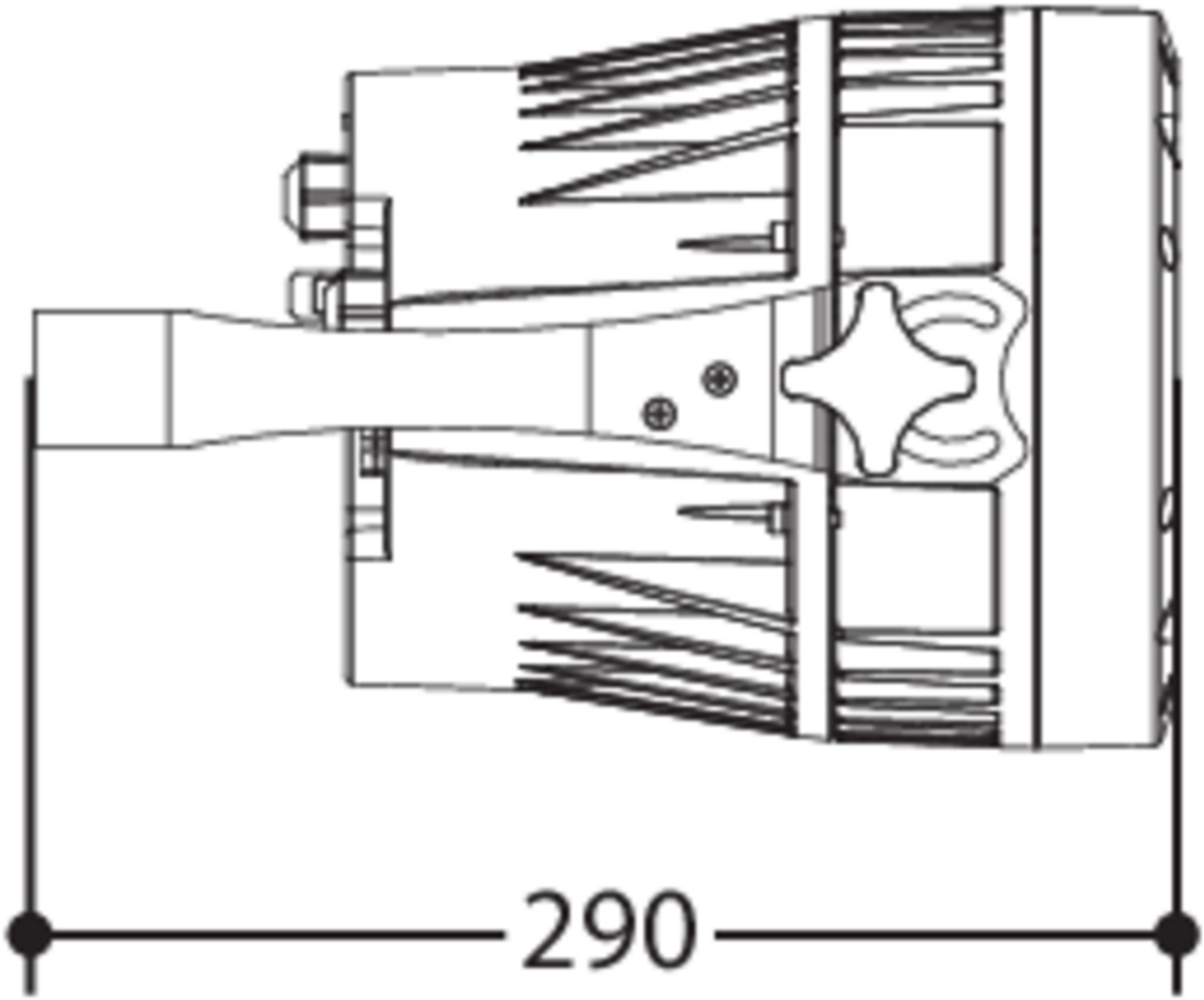

MUSIC & LIGHTS S.r.l.
Via A. Olivetti, snc
04026 - Minturno (LT) ITALY
info@prolights.it
Tel: +39 0771 72190
prolights.it
VAT No. IT 02057590594

Downloaded on 29/11/2026 - data may be provisional: features, specifications and appearance are subject to change without notice