ArcPod 15Q

ORDER CODE: ARCPOD15Q



SOURCE	IP RATING	WEIGHT
15x10W RGBW LEDs	**IP66 for outdoor installations**	**6,3kg / 13.89lbs**

LUMINOUS FLUX (MAX)
5'732 lm

TECHNICAL SPECIFICATIONS

LIGHT SOURCE

Source:	15x10W RGBW LEDs
Luminous flux:	(10°) 4'552 lm; (15°) 5'678 lm; (25°) 5'732 lm; (45°) 5'390 @Full
Lux:	(10°) 3'116 lx; (15°) 2'790 lx; (25°) 1'203 lx; (45°) 287lx @5 m full
Source life expectancy:	> 50.000 hrs (L70B10 @Ta 25° C / 77° F)

OPTICS

Beam angle:	25°
Field angle:	38°
Lens diameter:	36mm
Additional optics:	10° - 15° - 45° (optional) - see available accessories

COLOUR SYSTEM

CCT:	CCT control through dedicated DMX channel
White presets:	2.800 K ~ 10.000K
Colour wheel:	virtual colour wheel with macros
Macros:	several pre-built macros with adjustable speed

DYNAMIC EFFECTS

Static mode:	selection of static colour

MOVEMENT

Tilt:	0 - 130° with manual adjustment

CONTROL

Supported Protocols:	DMX512, RDM
DMX channels:	5 / 7 / 10ch
RDM:	for remote addressing and parameter configuration
Display:	user interface through DATAMASTER external coder (not included)
Master/Slave:	for synchronised operation of more units linked in a chain

ELECTRONICS

Dimmer:	linear 0 - 100% electronic dimmer
Strobe / shutter:	1 ~ 30 Hz, electronic
Selectable PWM:	600 to 25,000 Hz (selectable steps)
Firmware upgrade with:	via DMX with UPBOXPRO/ UPBOX1 (not included)

CONNECTIONS

Power connection:	1,8 m moulded IP power IN/OUT connectors
Signal connection:	1,8 m moulded IP signal IN/OUT connectors
Adaptors:	XLR and BARE END 16A adaptors included

ELECTRICAL

Mains power supply:	100-240V - 50/60Hz
Max power consumption (230V):	155W
Output (at 230V):	11 units on a single power line
Power factor:	>0,97

Downloaded on 29/11/2026 - data may be provisional: features, specifications and appearance are subject to change without notice

TECHNICAL SPECIFICATIONS

PHYSICAL

IP rating:	IP66 for outdoor installations
IK rating:	IK08 impact rating
Cooling:	fan-free with natural convection
Housing:	Sturdy die-cast aluminium body
Finish:	basalt grey (RAL 7012), also available with C5-M marine grade coating
Operating temperature:	Ta -20 to +45 °C (-4 to +113 °F)
Dimensions (WxHxD):	307x259x83mm
Weight:	6,3kg

CERTIFICATIONS / REPORTS

Compliance:	CE, UKCA, RCM, cTUVus, FCC

BOX CONTENT

1 x ARCPOD15Q

1 x 0,28 meters 3G1,5mmq power cable (BARE END - IP connection adapter)

1 x 5p XLR - IP connection female adapter

1 x 5p XLR - IP connection male adapter

Downloaded on 29/11/2026 - data may be provisional: features, specifications and appearance are subject to change without notice

ACCESSORIES & RELATED PRODUCTS



AETHERLINK
IP66 rated 1 Universe CRMX wireless transceiver for permanent outdoor installation



AWEXAC12ADP
Power adapter from AWEXAC1 cable series to AWEXAC2 cable series

A15QFILTER30
30° symmetric light diffusion filter for ARCPOD15Q, 11,4x18,6 cm

A15QFILTER60
60° symmetric light diffusion filter for ARCPOD15Q, 11,4x18,6 cm

A15QFILTER1090
10°x90° (VxH) asymmetric light diffusion filter for ARCPOD15Q, 11,4x18,6 cm

A15QFILTER3060
30°x60° (VxH) asymmetric light diffusion filter for ARCPOD15Q, 11,4x18,6 cm

A15QFILTER6010
60°x10° (VxH) asymmetric light diffusion filter for ARCPOD15Q, 11,4x18,6 cm



S27QLENS10
10° lens for SOLAR27, ARCPOD27, SOLAR48, ARCPOD48, ARCPOD15 and ARCPOD96 series



S27QLENS25
25° lens for SOLAR27, ARCPOD27, SOLAR48, ARCPOD48, ARCPOD15 and ARCPOD96 series



A15QSNOOT
Snoot for ARCPOD15Q



DATAMASTER
RDM/DMX tool,cable tester, 5p XLR connectors,pouch, charging cable, XLR adapters



AWEXAC1L05
IP67 power extension cable for outdoor architectural projectors, L.05 m



AWEXAC1L20
IP67 power extension cable for outdoor architectural projectors, L.2 0m



AWEXDC1L05
IP67 DMX extension cable for outdoor architectural projectors, L.05 m



AWEXDC1L20
IP67 DMX extension cable for outdoor architectural projectors, L.20 m



AWEXDC1221ADP
Signal adapter kit from AWEXDC1 series to AWEXDC2 series and vice versa

A15QFILTER20
20° symmetric light diffusion filter for ARCPOD15Q, 11,4x18,6 cm

A15QFILTER40
40° symmetric light diffusion filter for ARCPOD15Q, 11,4x18,6 cm

A15QFILTER80
80° symmetric light diffusion filter for ARCPOD15Q, 11,4x18,6 cm

A15QFILTER1060
10°x60° (VxH) asymmetric light diffusion filter for ARCPOD15Q, 11,4x18,6 cm

A15QFILTER9010
90°x10° (VxH) asymmetric light diffusion filter for ARCPOD15Q, 11,4x18,6 cm

A15QFILTER6030
60°x30° (VxH) asymmetric light diffusion filter for ARCPOD15Q, 11,4x18,6 cm



S27QLENS15
15° lens for SOLAR27, ARCPOD27, SOLAR48, ARCPOD48, ARCPOD15 and ARCPOD96 series



S27QLENS45
45° lens for SOLAR27, ARCPOD27, SOLAR48, ARCPOD48, ARCPOD15 and ARCPOD96 series



A15QBD
Black barn door with 4 directional flaps to adjust the light beam, ARCPOD15Q



AWEXAC1L03
IP67 power extension cable for outdoor architectural projectors, L.03 m



AWEXAC1L10
IP67 power extension cable for outdoor architectural projectors, L.10 m



AWEXDC1L03
IP67 DMX extension cable for outdoor architectural projectors, L.03 m



AWEXDC1L10
IP67 DMX extension cable for outdoor architectural projectors, L.10 m



UPBOXPRO
Firmware uploader kit, USB IN, 5-pin XLR DMX OUT connector

Downloaded on 29/11/2026 - data may be provisional: features, specifications and appearance are subject to change without notice

TECHNICAL DRAWINGS

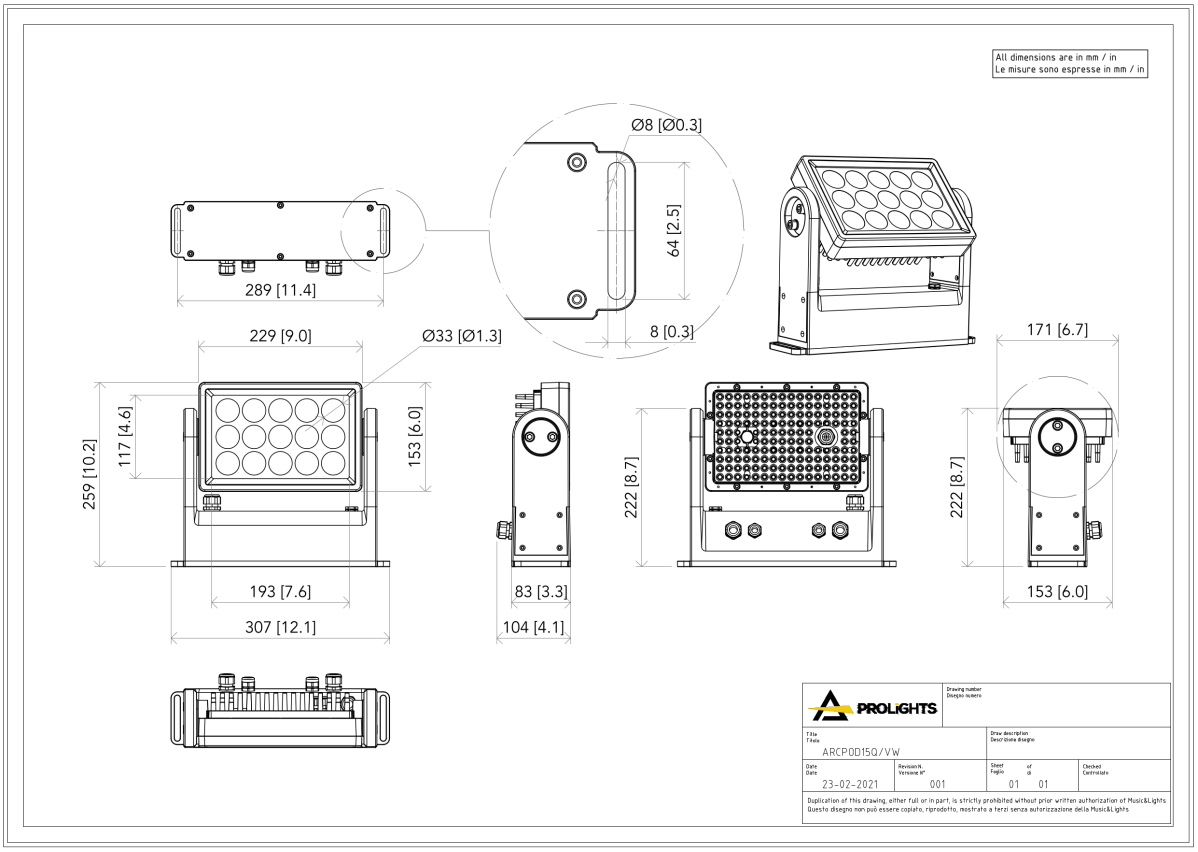

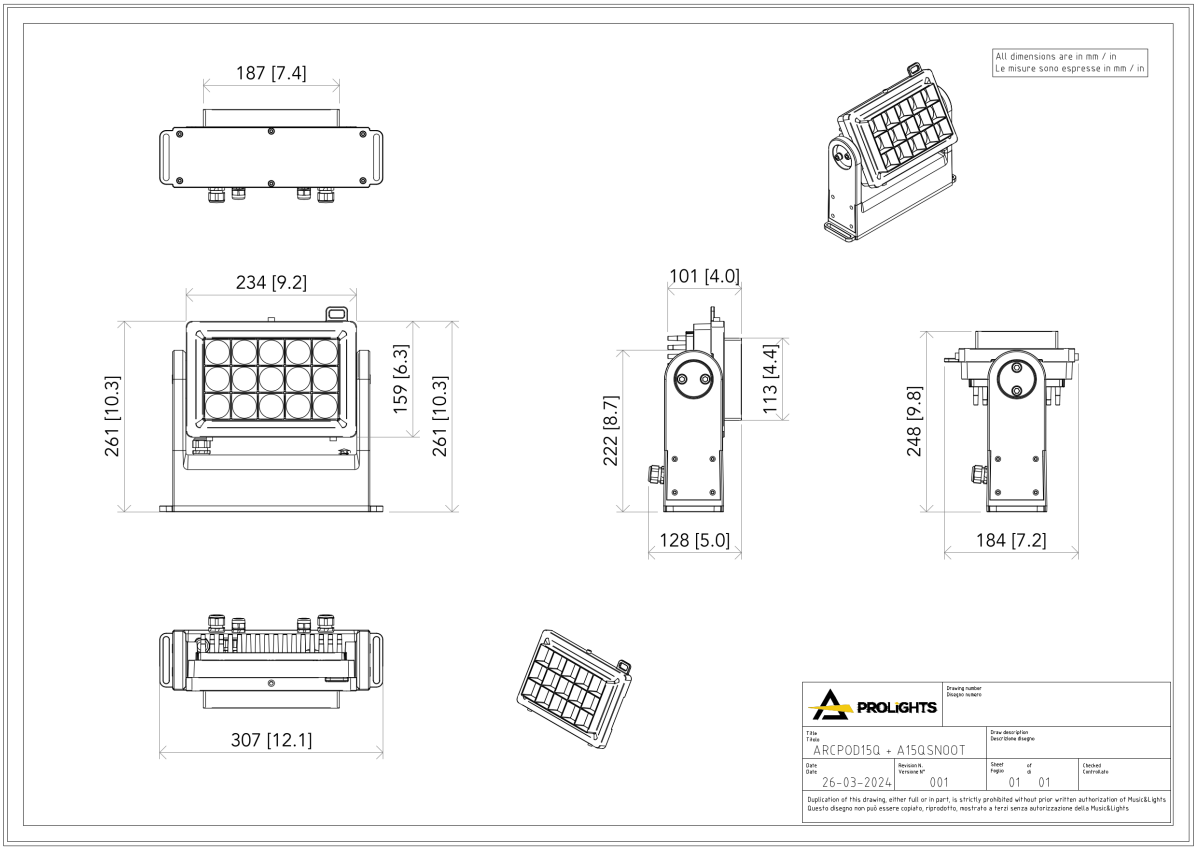

PHOTOMETRICS

Full on - 10°

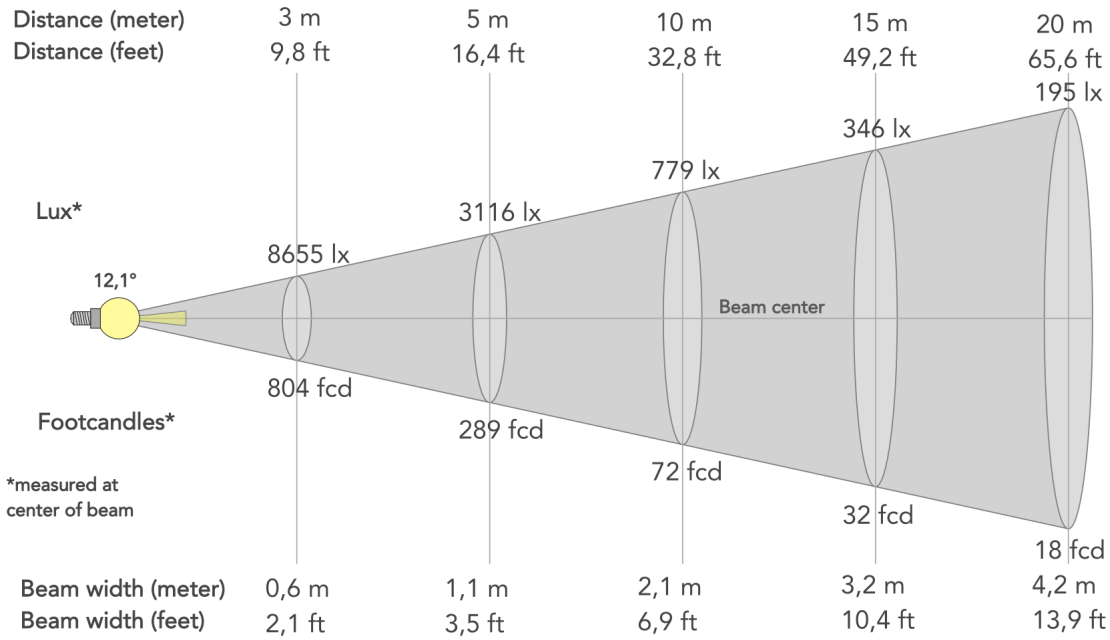

Beam angle (50%): **12.1°**	Field angle (10%): **20.7°**	Cut-off angle (2.5%): **29.6°**

Full on - 15°

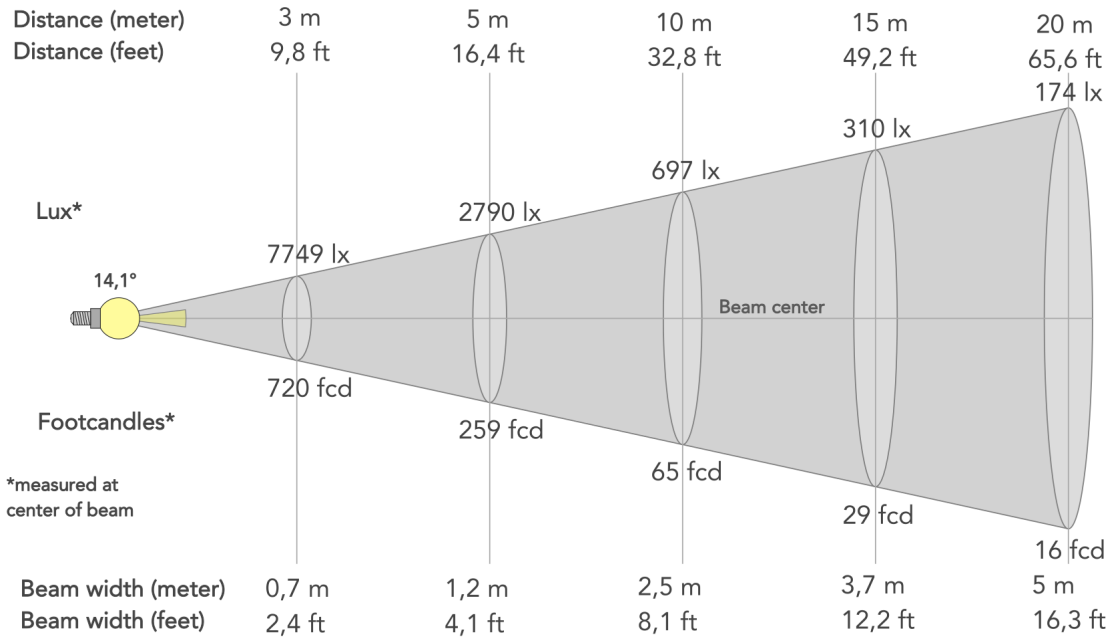

Beam angle (50%): **14.1°**	Field angle (10%): **26°**	Cut-off angle (2.5%): **38.7°**

Downloaded on 29/11/2026 - data may be provisional: features, specifications and appearance are subject to change without notice

Full on - 25°

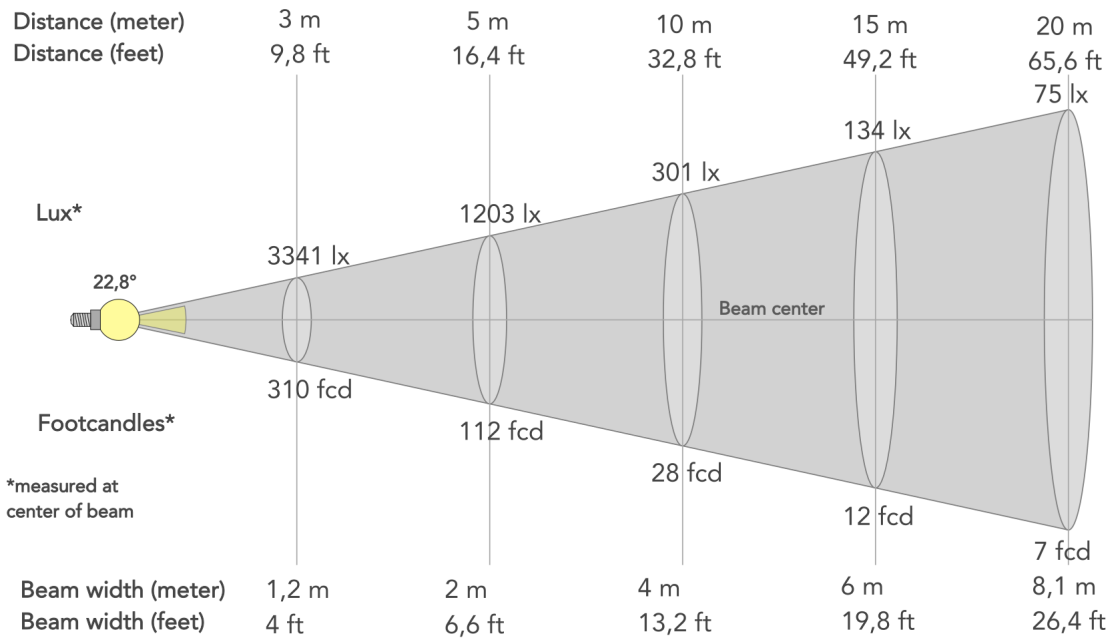

Beam angle (50%): **22.8°**	Field angle (10%): **39.7°**	Cut-off angle (2.5%): **57°**

Full on - 45°

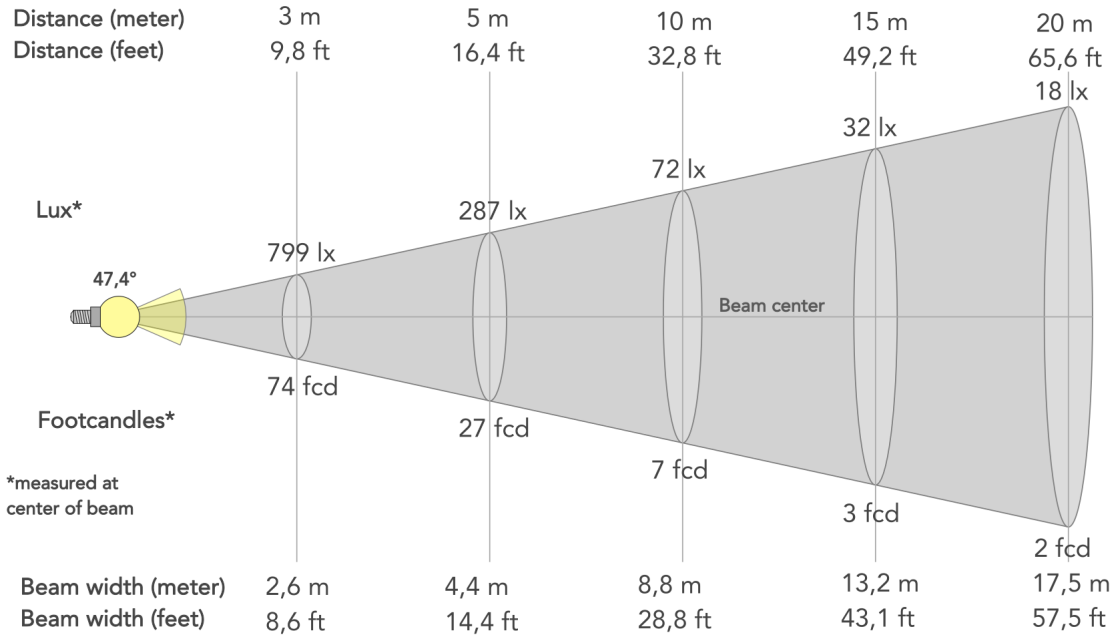

Beam angle (50%): **47.4°**	Field angle (10%): **85.1°**	Cut-off angle (2.5%): **108.1°**

MUSIC & LIGHTS S.r.l. | Via A. Olivetti, snc
04026 - Minturno (LT) ITALY | info@prolights.it
Tel: +39 0771 72190 | **prolights.it**
VAT No. IT 02057590594

Downloaded on 29/11/2026 - data may be provisional: features, specifications and appearance are subject to change without notice