ArcPod 48VW

ORDER CODE: **ARCPOD48VW**



VERSIONS

	Code	Painting
	**ARCPOD48VW**	**Standard**
	ARCPOD48VWC5M	C5M

SOURCE
48x10W Warm White + Cold White LEDs

IP RATING
IP66 for outdoor installations

WEIGHT
14kg / 30.86lbs

LUMINOUS FLUX (MAX)
46'553 lm

CRI
81,3 @ WW

Downloaded on 26/11/2026 - data may be provisional: features, specifications and appearance are subject to change without notice

TECHNICAL SPECIFICATIONS

LIGHT SOURCE

Source:	48x10W Warm White + Cold White LEDs
Luminous flux:	(15°) 25'309 lm; (15°+20°) 24'786 lm; (15°+30°) 24'628 lm; (15° +40°) 24'658 lm; (15°+60°) 24'204 lm; (15°+80°) 23'372 lm; (15° +10°x60°) 46'553 lm; (15° +30°x60°) 27'287 @Full
Lux:	(15°) 19'746 lx; (15°+20°) 3'992 lx; (15°+30°) 2'485 lx: (15°+40°) 1'310 lx; (15°+60°) 906 lx; (15° +80°) 585 lx; (15°+10°x60°) 3'470 lx; (15°+30°x60°) 1'578lx @5 m full
CRI:	81,3 @ WW; 83.5 @ CW; 86,2 @ full
Source life expectancy:	> 50.000 hrs (L70B10 @Ta 25° C / 77° F)

CONTROL

Supported Protocols:	DMX512, RDM
DMX channels:	1 / 2 / 3 / 5 / 11 / 14ch
Pixel control:	up to 4 linear controllable sections
RDM:	for remote addressing and parameter configuration
Display:	user interface through DATAMASTER external coder (not included)
Master/Slave:	for synchronised operation of more units linked in a chain

CONNECTIONS

Power connection:	1,8 m moulded IP power IN/OUT connectors
Signal connection:	1,8 m moulded IP signal IN connector
Adaptors:	XLR and BARE END 16A adaptors included

OPTICS

Additional optics:	see available accessories

COLOUR SYSTEM

CCT:	CCT control through dedicated DMX channel
White presets:	2.700 K ~ 6.500K
Colour wheel:	virtual colour wheel with macros
Macros:	several pre-built macros with adjustable speed

DYNAMIC EFFECTS

FX generator:	up to 4 linear controllable sections
Static mode:	selection of static colour

MOVEMENT

Tilt:	0 - 130° with manual adjustment

ELECTRONICS

Dimmer:	linear 0 - 100% electronic dimmer
Dimmer curves:	4 selectable dimming modes available
Strobe / shutter:	1 ~ 30 Hz, electronic
Selectable PWM:	600 to 25,000 Hz (selectable steps)
Firmware upgrade with:	via DMX with UPBOXPRO/ UPBOX1 (not included)

ELECTRICAL

Mains power supply:	100-240V - 50/60Hz
Max power consumption (230V):	520W
Output (at 230V):	4 units on a single power line
Max power consumption (120V):	552W
Output (at 120V):	2 units on a single power line
Power factor:	0,96

Downloaded on 26/11/2026 - data may be provisional: features, specifications and appearance are subject to change without notice

TECHNICAL SPECIFICATIONS

PHYSICAL

IP rating:	IP66 for outdoor installations
IK rating:	IK08 impact rating
Cooling:	fan-free with natural convection
Housing:	Sturdy die-cast aluminium body
Finish:	basalt grey (RAL 7012), C5-M marine grade coating
Operating temperature:	Ta -20 to +45 °C (-4 to +113 °F)
Dimensions (WxHxD):	584x304x93mm
Weight:	14kg

CERTIFICATIONS / REPORTS

Compliance:	CE, UKCA, RCM, cTUVus, FCC

BOX CONTENT

1 x ARCPOD48VW

1 x 1,5 meters 3G2,5mmq power cable (BARE END - IP connection adapter)

1 x 5p XLR - IP connection female adapter

1 x 5p XLR - IP connection male adapter

Downloaded on 26/11/2026 - data may be provisional: features, specifications and appearance are subject to change without notice

ACCESSORIES & RELATED PRODUCTS



AETHERLINK
IP66 rated 1 Universe CRMX wireless transceiver for permanent outdoor installation



AWEXAC12ADP
Power adapter from AWEXAC1 cable series to AWEXAC2 cable series

A48QFILTER30
30° symmetric light diffusion filter for ARCPOD48Q and ARCPOD96Q 15x44,7 cm

A48QFILTER60
60° symmetric light diffusion filter for ARCPOD48Q and ARCPOD96Q 15x44,7 cm

A48QFILTER1060
10°x60° (VxH) asymmetric light diffusion filter for ARCPOD48Q and ARCPOD96Q, 15x44,7 cm

A48QFILTER6010
60°x10° (VxH) asymmetric light diffusion filter for ARCPOD48Q and ARCPOD96Q, 15x44,7 cm



S27QLENS10
10° lens for SOLAR27, ARCPOD27, SOLAR48, ARCPOD48, ARCPOD15 and ARCPOD96 series



S27QLENS25
25° lens for SOLAR27, ARCPOD27, SOLAR48, ARCPOD48, ARCPOD15 and ARCPOD96 series



S48QBD
Black barn door 4 directional flaps to adjust the light beam, SOLAR4Q,ARCPOD48Q



AWEXAC1L03
IP67 power extension cable for outdoor architectural projectors, L.03 m



AWEXAC1L10
IP67 power extension cable for outdoor architectural projectors, L.10 m



AWEXDC1L05
IP67 DMX extension cable for outdoor architectural projectors, L.05 m



AWEXDC1L03
IP67 DMX extension cable for outdoor architectural projectors, L.03 m



UPBOXPRO
Firmware uploader kit, USB IN, 5-pin XLR DMX OUT connector



AWEXDC1221ADP
Signal adapter kit from AWEXDC1 series to AWEXDC2 series and vice versa

A48QFILTER20
20° symmetric light diffusion filter for ARCPOD48Q and ARCPOD96Q 15x44,7 cm

A48QFILTER40
40° symmetric light diffusion filter for ARCPOD48Q and ARCPOD96Q 15x44,7 cm

A48QFILTER80
80° symmetric light diffusion filter for ARCPOD48Q and ARCPOD96Q 15x44,7 cm

A48QFILTER3060
30°x60° (VxH) asymmetric light diffusion filter for ARCPOD48Q and ARCPOD96Q, 15x44,7 cm

A48QFILTER6030
60°x30° (VxH) asymmetric light diffusion filter for ARCPOD48Q and ARCPOD96Q, 15x44,7 cm



S27QLENS15
15° lens for SOLAR27, ARCPOD27, SOLAR48, ARCPOD48, ARCPOD15 and ARCPOD96 series



S27QLENS45
45° lens for SOLAR27, ARCPOD27, SOLAR48, ARCPOD48, ARCPOD15 and ARCPOD96 series



DATAMASTER
RDM/DMX tool,cable tester, 5p XLR connectors,pouch, charging cable, XLR adapters



AWEXAC1L05
IP67 power extension cable for outdoor architectural projectors, L.05 m



AWEXAC1L20
IP67 power extension cable for outdoor architectural projectors, L.2 0m



AWEXDC1L10
IP67 DMX extension cable for outdoor architectural projectors, L.10 m



AWEXDC1L20
IP67 DMX extension cable for outdoor architectural projectors, L.20 m

Downloaded on 26/11/2026 - data may be provisional: features, specifications and appearance are subject to change without notice

TECHNICAL DRAWINGS

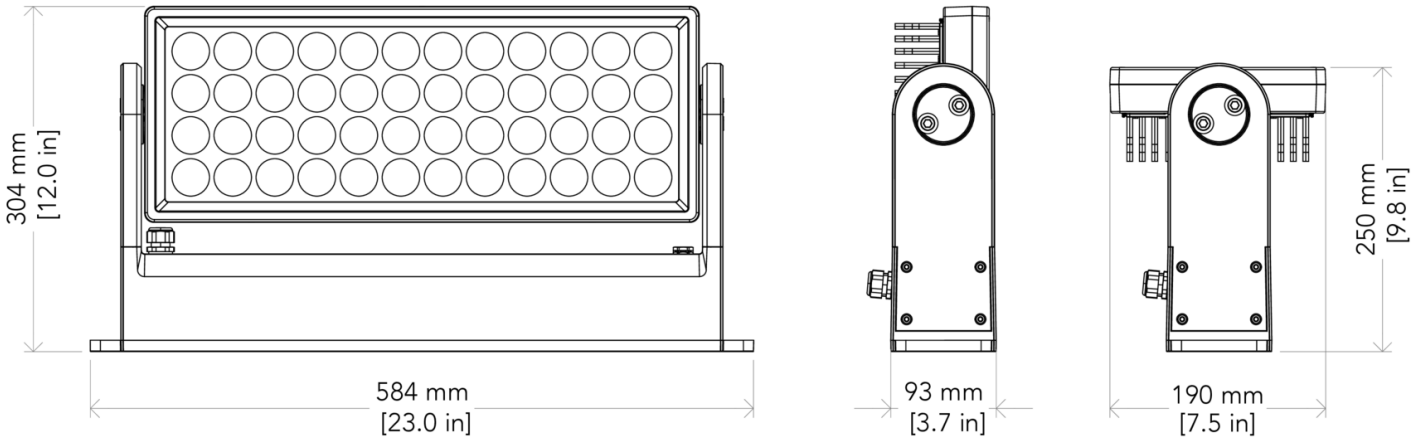

Downloaded on 26/11/2026 - data may be provisional: features, specifications and appearance are subject to change without notice

PHOTOMETRICS

Full On - 15°

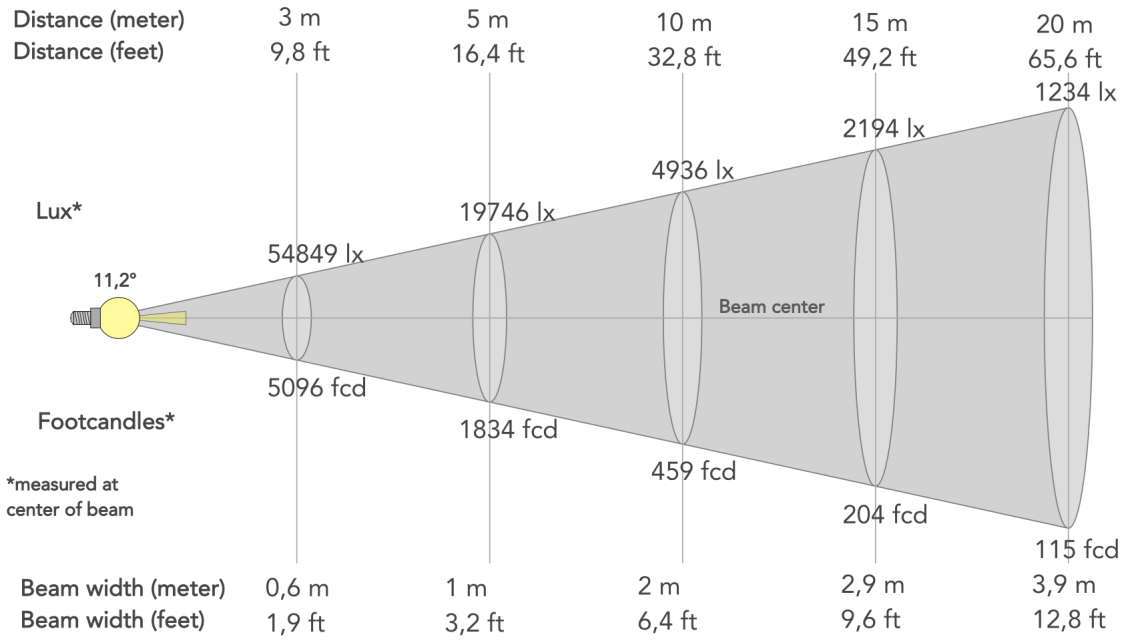

Beam angle (50%): **11.2°**	Field angle (10%): **20.6°**	Cut-off angle (2.5%): **29°**