ArcPod 96Q

ORDER CODE: **ARCPOD96Q**

5 YEARS Warranty

C5M



SOURCE
96x10W RGBW LEDs

IP RATING
IP66 for outdoor installations

WEIGHT
27kg / 59.52lbs

LUMINOUS FLUX (MAX)
46'094 lm

TECHNICAL SPECIFICATIONS

LIGHT SOURCE

Source:	96x10W RGBW LEDs
Luminous flux:	(15°) 46'094 lm - (25°) 41'570 lm - (45°) 33'410 @Full
Lux:	(15°) 61'963 lx - (25°) 25'823 lx - (45°) 5'575lx @3 m full
Lux:	(15°) 22'307 lx - (25°) 9'266 lx - (45°) 2'007lx @5 m full
Source life expectancy:	> 50.000 hrs (L70B10 @Ta 25° C / 77° F)

OPTICS

Beam angle:	(bottom head) 15° - (top head) 10°
Additional optics:	25° - 45° (optional) - see available accessories

COLOUR SYSTEM

CCT:	CCT control through dedicated DMX channel
Colour wheel:	virtual colour wheel with macros
Macros:	several pre-built macros with adjustable speed

DYNAMIC EFFECTS

FX generator:	up to 8 linear controllable sections
Static mode:	selection of static colour

CONTROL

Supported Protocols:	DMX512, RDM
DMX channels:	8 / 10 / 14 / 20 / 34 / 44ch
Pixel control:	up to 8 linear controllable sections
RDM:	for remote addressing and parameter configuration
Display:	user interface through DATAMASTER external coder (not included)
Master/Slave:	for synchronised operation of more units linked in a chain

MOVEMENT

Tilt:	180° with manual adjustment

ELECTRONICS

Dimmer:	linear 0 - 100% electronic dimmer
Dimmer curves:	4 selectable dimming modes available
Strobe / shutter:	1 ~ 30 Hz, electronic
Selectable PWM:	600 to 25,000 Hz (selectable steps)
Firmware upgrade with:	via DMX with UPBOXPRO/ UPBOX1 (not included)

CONNECTIONS

Power connection:	1,8 m moulded IP power IN/OUT connectors
Signal connection:	1,8 m moulded IP signal IN connector
Adaptors:	XLR and BARE END 16A adaptors included

ELECTRICAL

Mains power supply:	100-240V - 50/60Hz
Max power consumption (230V):	1020W
Output (at 230V):	4 units on a single power line
Power factor:	> 0,96

Downloaded on 29/11/2026 - data may be provisional: features, specifications and appearance are subject to change without notice

TECHNICAL SPECIFICATIONS

PHYSICAL

IP rating:	IP66 for outdoor installations
IK rating:	IK08 impact rating
Cooling:	fan-free with natural convection
Housing:	Sturdy die-cast aluminium body
Finish:	basalt grey (RAL 7012), also available with C5-M marine grade coating
Operating temperature:	Ta -20 to +45 °C (-4 to +113 °F)
Dimensions (WxHxD):	670x513x220mm
Weight:	27kg

CERTIFICATIONS / REPORTS

Compliance:	CE, RCM, FCC, cTUVus

BOX CONTENT

1 x ARCPOD96Q

1 x 0,17 meters 3G2,5mmq power cable (BARE END - IP connection adapter)

1 x 5p XLR - IP connection female adapter

1 x 5p XLR - IP connection male adapter

Downloaded on 29/11/2026 - data may be provisional: features, specifications and appearance are subject to change without notice

ACCESSORIES & RELATED PRODUCTS



AETHERLINK
IP66 rated 1 Universe CRMX wireless transceiver for permanent outdoor installation



AWEXAC12ADP
Power adapter from AWEXAC1 cable series to AWEXAC2 cable series

A48QFILTER30
30° symmetric light diffusion filter for ARCPOD48Q and ARCPOD96Q 15x44,7 cm

A48QFILTER60
60° symmetric light diffusion filter for ARCPOD48Q and ARCPOD96Q 15x44,7 cm

A48QFILTER1090
10°x90° (VxH) asymmetric light diffusion filter for ARCPOD48Q and ARCPOD96Q, 15x44,7 cm

A48QFILTER3060
30°x60° (VxH) asymmetric light diffusion filter for ARCPOD48Q and ARCPOD96Q, 15x44,7 cm

A48QFILTER6010
60°x10° (VxH) asymmetric light diffusion filter for ARCPOD48Q and ARCPOD96Q, 15x44,7 cm



S27QLENS10
10° lens for SOLAR27, ARCPOD27, SOLAR48, ARCPOD48, ARCPOD15 and ARCPOD96 series



S27QLENS25
25° lens for SOLAR27, ARCPOD27, SOLAR48, ARCPOD48, ARCPOD15 and ARCPOD96 series



S48QBD
Black barn door 4 directional flaps to adjust the light beam, SOLAR4Q,ARCPOD48Q



AWEXAC1L03
IP67 power extension cable for outdoor architectural projectors, L.03 m



AWEXAC1L10
IP67 power extension cable for outdoor architectural projectors, L.10 m



AWEXDC1L03
IP67 DMX extension cable for outdoor architectural projectors, L.03 m



AWEXDC1L10
IP67 DMX extension cable for outdoor architectural projectors, L.10 m



UPBOXPRO
Firmware uploader kit, USB IN, 5-pin XLR DMX OUT connector



AWEXDC1221ADP
Signal adapter kit from AWEXDC1 series to AWEXDC2 series and vice versa

A48QFILTER20
20° symmetric light diffusion filter for ARCPOD48Q and ARCPOD96Q 15x44,7 cm

A48QFILTER40
40° symmetric light diffusion filter for ARCPOD48Q and ARCPOD96Q 15x44,7 cm

A48QFILTER80
80° symmetric light diffusion filter for ARCPOD48Q and ARCPOD96Q 15x44,7 cm

A48QFILTER1060
10°x60° (VxH) asymmetric light diffusion filter for ARCPOD48Q and ARCPOD96Q, 15x44,7 cm

A48QFILTER9010
90°x10° (VxH) asymmetric light diffusion filter for ARCPOD48Q and ARCPOD96Q, 15x44,7 cm

A48QFILTER6030
60°x30° (VxH) asymmetric light diffusion filter for ARCPOD48Q and ARCPOD96Q, 15x44,7 cm



S27QLENS15
15° lens for SOLAR27, ARCPOD27, SOLAR48, ARCPOD48, ARCPOD15 and ARCPOD96 series



S27QLENS45
45° lens for SOLAR27, ARCPOD27, SOLAR48, ARCPOD48, ARCPOD15 and ARCPOD96 series



DATAMASTER
RDM/DMX tool,cable tester, 5p XLR connectors,pouch, charging cable, XLR adapters



AWEXAC1L05
IP67 power extension cable for outdoor architectural projectors, L.05 m



AWEXAC1L20
IP67 power extension cable for outdoor architectural projectors, L.2 0m



AWEXDC1L05
IP67 DMX extension cable for outdoor architectural projectors, L.05 m



AWEXDC1L20
IP67 DMX extension cable for outdoor architectural projectors, L.20 m

Downloaded on 29/11/2026 - data may be provisional: features, specifications and appearance are subject to change without notice

TECHNICAL DRAWINGS

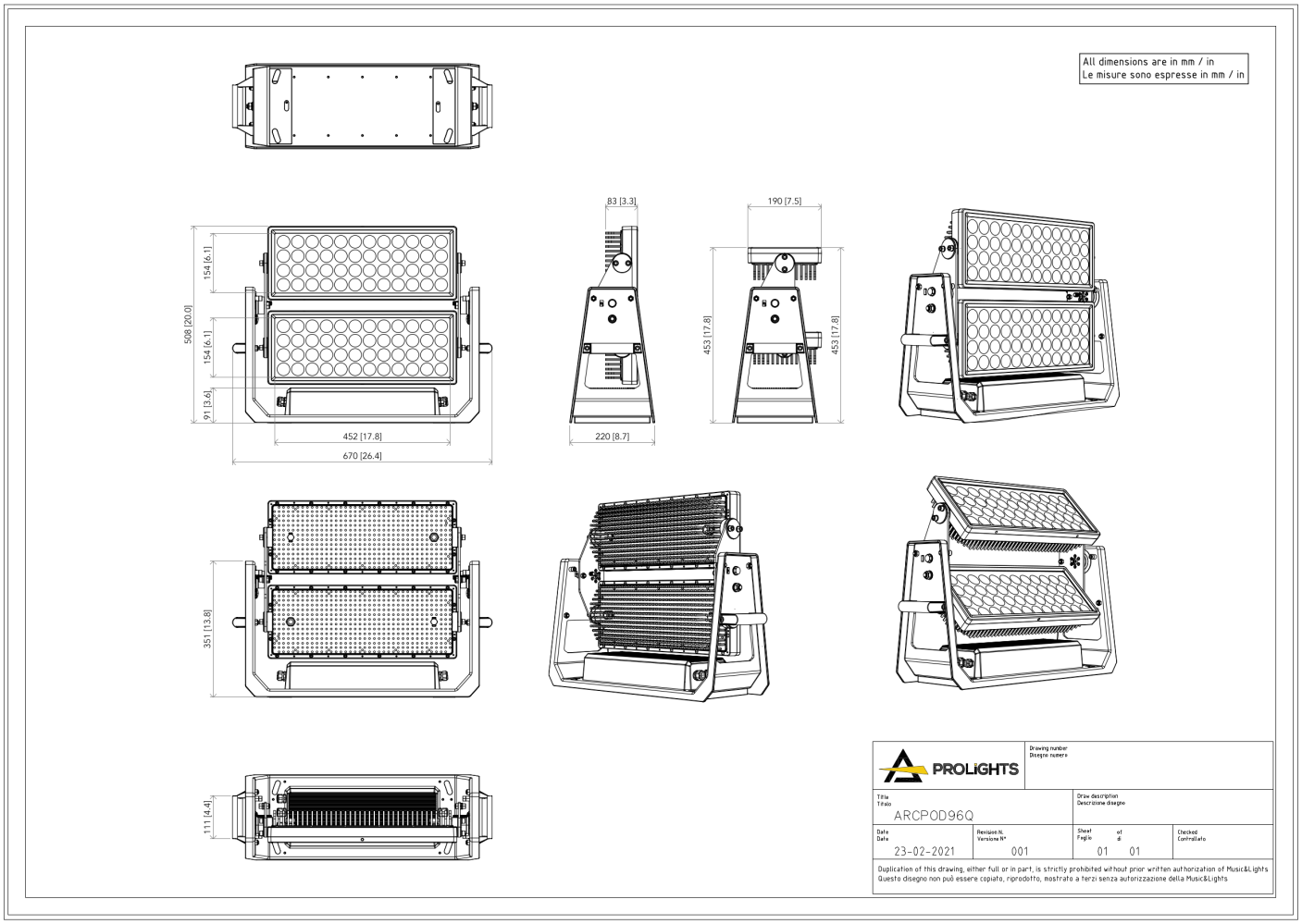

PHOTOMETRICS

Full on - 10°

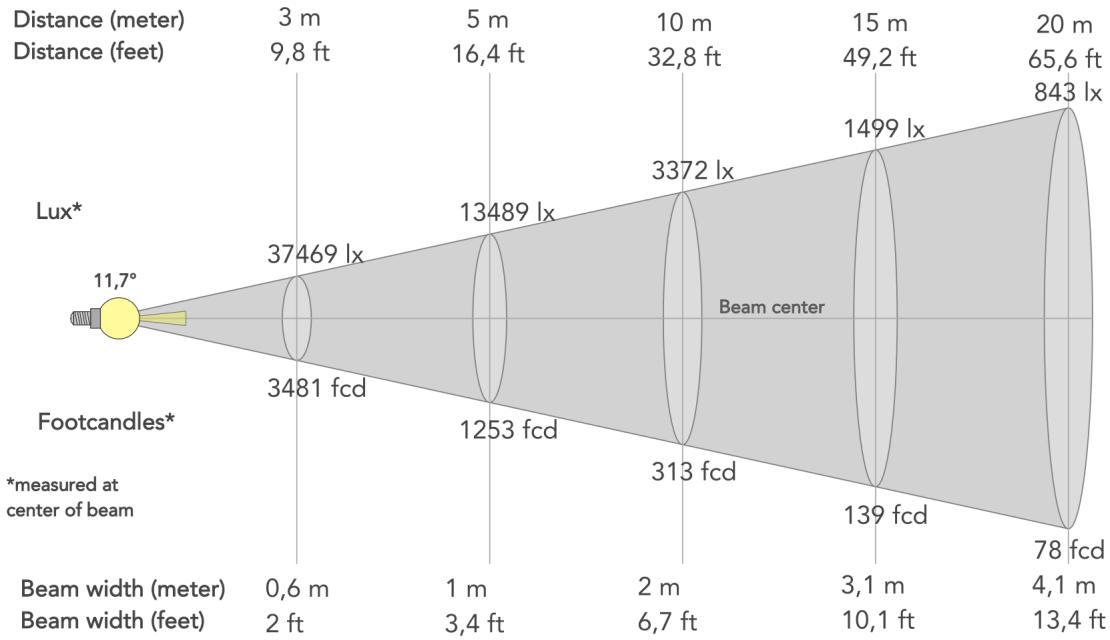

Beam angle (50%): **11.7°**	Field angle (10%): **19.8°**	Cut-off angle (2.5%): **27.8°**

Full on - 15°

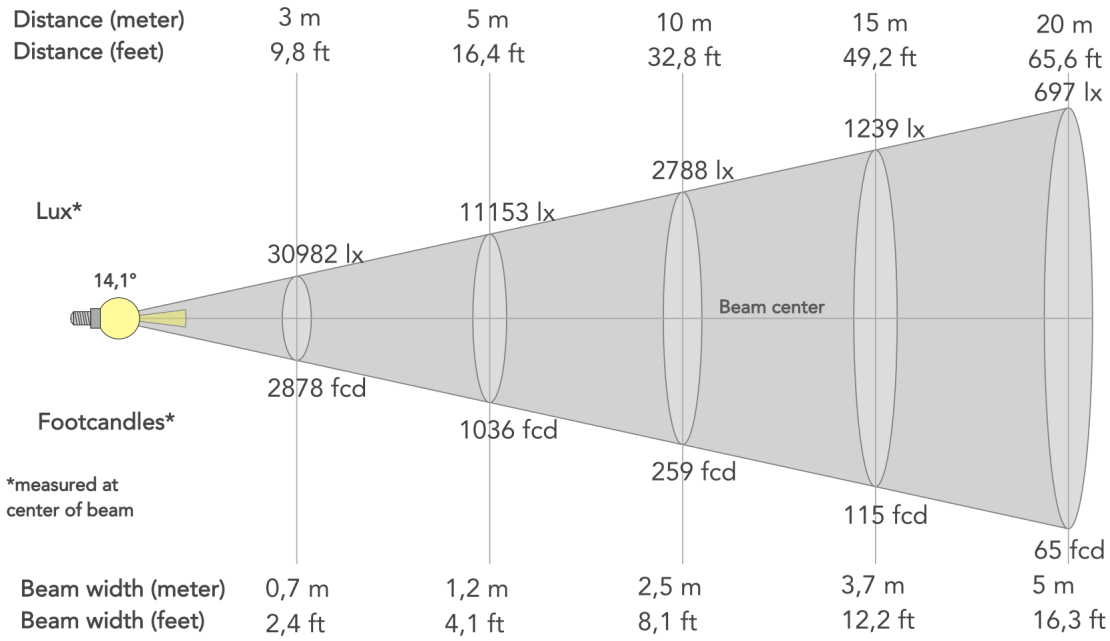

Beam angle (50%): **14.1°**	Field angle (10%): **25.8°**	Cut-off angle (2.5%): **37.8°**

Full on - 25°

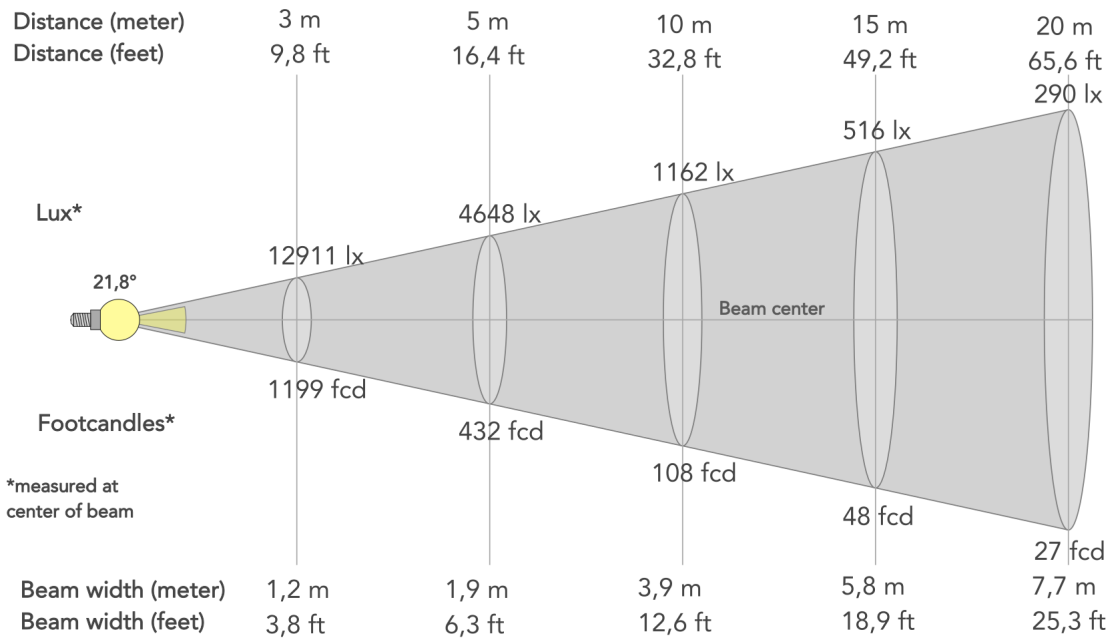

Beam angle (50%): **21.8°**	Field angle (10%): **37.9°**	Cut-off angle (2.5%): **54.9°**

Full on - 45°

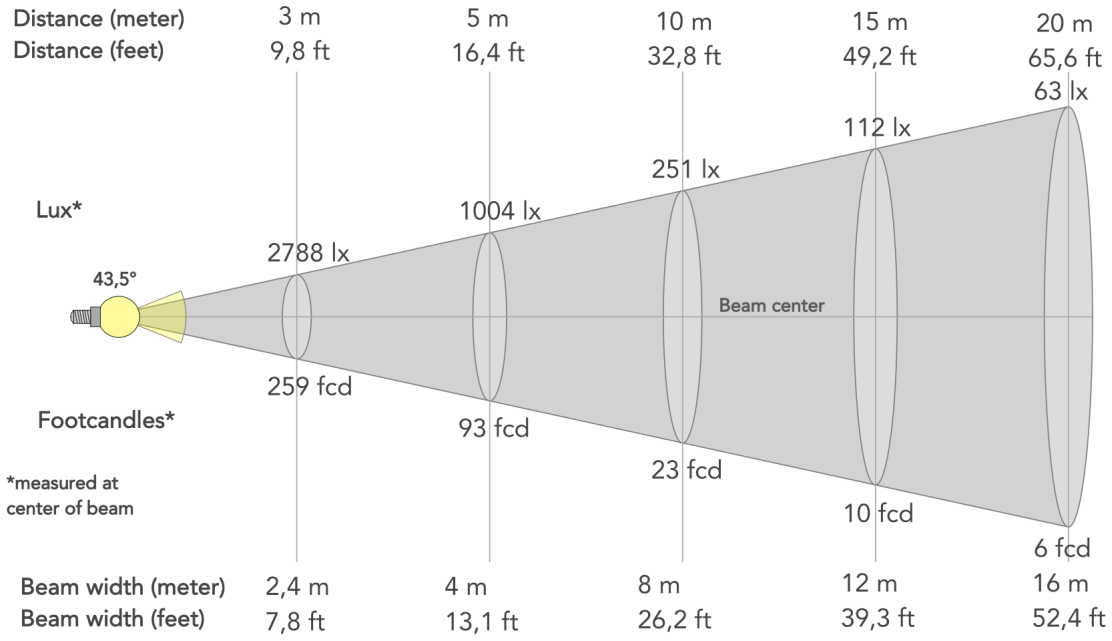

Beam angle (50%): **43.5°**	Field angle (10%): **80°**	Cut-off angle (2.5%): **104°**