ArcSpot DOTFC

ORDER CODE: ARCSPOTDOTFCGY



SOURCE	IP RATING	WEIGHT
1 x 20W RGB + Warm White LED	**IP66 for outdoor installations**	**1,1kg / 2.43lbs**

Downloaded on 26/11/2026 - data may be provisional: features, specifications and appearance are subject to change without notice

TECHNICAL SPECIFICATIONS

LIGHT SOURCE

Source:	1 x 20W RGB + Warm White LED
Luminous flux:	592 @Full
Lux:	699lx @5 m full
Source life expectancy:	> 90.000 hrs (L70B10 @Ta 25° C / 77° F)

OPTICS

Beam angle:	5°
Field angle:	14°
Lens diameter:	60mm
Additional optics:	see available accessories

COLOUR SYSTEM

CCT:	CCT channel from 2.800K to 10.000K
Tint correction:	± green correction adjustment
Colour wheel:	gel filters included
Macros:	built-in white presets

DYNAMIC EFFECTS

Static mode:	selection of static dimmer, colors and color temperature
Manual mode:	manual adjustment of colour
Auto mode:	built-in programs with execution speed adjustment

CONTROL

Supported Protocols:	DMX512, RDM
DMX channels:	5 / 6 / 9 / 12ch
RDM:	for remote addressing and parameter configuration
Display:	user interface through DATAMASTER external coder (not included)
Master/Slave:	for synchronised operation of more units linked in a chain
Other:	16bit control of dimmer and colour

ELECTRONICS

Dimmer:	linear 0 - 100% electronic dimmer
Dimmer curves:	4 selectable dimming modes available
Strobe / shutter:	1-30 Hz, electronic
Selectable PWM:	600 to 25,000 Hz (selectable steps)
Firmware upgrade with:	via DMX with UPBOXPRO/ UPBOX1 (not included)

CONNECTIONS

Power connection:	53 cm moulded IP power IN connector
Signal connection:	53 cm moulded IP signal IN/OUT connectors
Adaptors:	XLR and BARE END 16A adaptors included

ELECTRICAL

Mains power supply:	100-240V - 50/60Hz
Max power consumption (230V):	24W
Standby power:	0,5 W
Power factor:	> 0,9

PHYSICAL

IP rating:	IP66 for outdoor installations
IK rating:	IK07 impact rating
Housing:	Sturdy die-cast aluminium body, scratch-resistant C5M Marine Grade paint (as standard)
Finish:	basalt grey (RAL 7012)
Operating temperature:	Ta -20 to +45 °C (-4 to +113 °F)
Dimensions (WxHxD):	132x156x112mm
Weight:	1,1kg

INSTALLATION

Suspension and fixing:	bracket for hanging and floor positioning
Other:	

CERTIFICATIONS / REPORTS

Compliance:	CE, RCM, FCC, cTUVus

Downloaded on 26/11/2026 - data may be provisional: features, specifications and appearance are subject to change without notice

TECHNICAL SPECIFICATIONS

BOX CONTENT

1 x ARCSPOTDOTFC

1 x 0,3 meters 3G1mmq power cable (BARE END - IP connection adapter)

1 x 5p XLR - IP connection male adapter

1 x 5p XLR - IP connection female adapter

ACCESSORIES & RELATED PRODUCTS



ARCSPK
ArcSpot Series Ground Spike, RAL7012 with C5M (Marine Grade)



DATAMASTER
RDM/DMX tool,cable tester, 5p XLR connectors,pouch, charging cable, XLR adapters



PLYPC3010E73D
Y splitter power cable 3x1.0 mm2, IP67 connectors (1 IN + 2 OUT), 80 cm lenght



THR209S6D
4-Way junction box type H, 3 poles, IP66/IP68



THR390S3T
3-Way junction connector, 'T' type, 3 Poles, IP68



AETHERLINK
IP66 rated 1 Universe CRMX wireless transceiver for permanent outdoor installation



ARDOTFILTER20
Light diffusion filter for ARCSPOTDOT series, 20°



ARDOTFILTER40
Light diffusion filter for ARCSPOTDOT series, 40°



ARDOTFILTER60
Light diffusion filter for ARCSPOTDOT series, 60°



ARDOTFILTER1060
Light diffusion filter for ARCSPOTDOT series, 10°x60° (VxH)



ARDOTFILTER3060
Light diffusion filter for ARCSPOTDOT series, 30°x60° (VxH)



ARDOTHSNOOTGY
Half snoot for ARCSPOTDOT series, RAL 7012



ASPOTOUTERCASEDOT
Outercase box for ground installation for ARCSPOTDOT series



AWEXAC2L03
Extension IP67 power cable, IPpowercon-F -> IPpowercon-M, 3m



AWEXAC2L05
Extension IP67 power cable, IPpowercon-F -> IPpowercon-M, 5m



AWEXAC2L10
Extension IP67 power cable, IPpowercon-F -> IPpowercon-M, 10m



AWEXAC2L20
Extension IP67 power cable, IPpowercon-F -> IPpowercon-M, 20m



AWEXDC2L03
Extension IP67 signal cable, IPdataCON-F -> IPdataCON-M, 3m



AWEXDC2L05
Extension IP67 signal cable, IPdataCON-F -> IPdataCON-M, 5m



AWEXDC2L10
Extension IP67 signal cable, IPdataCON-F -> IPdataCON-M, 10m



AWEXDC2L20
Extension IP67 signal cable, IPdataCON-F -> IPdataCON-M, 20m



AWEXDC1221ADP
Signal adapter kit from AWEXDC1 series to AWEXDC2 series and vice versa



AWEXAC12ADP
Power adapter from AWEXAC1 cable series to AWEXAC2 cable series



IPTESTBOX
Portable vacuum and pressure tester for ProLights IP fixtures



UPBOXPRO
Firmware uploader kit, USB IN, 5-pin XLR DMX OUT connector

Downloaded on 26/11/2026 - data may be provisional: features, specifications and appearance are subject to change without notice

TECHNICAL DRAWINGS

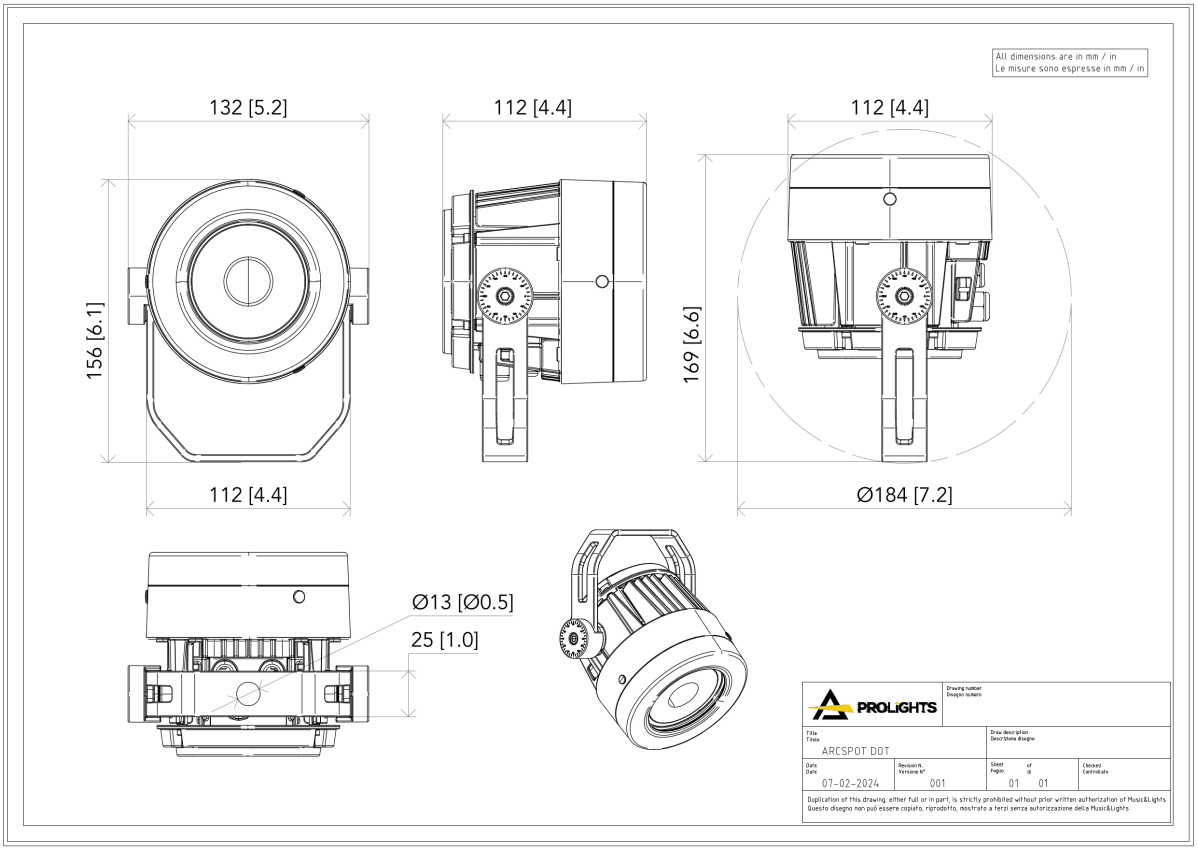

All dimensions are in mm / in
Le misure sono espresse in mm / in

ARDOTHSNOOT

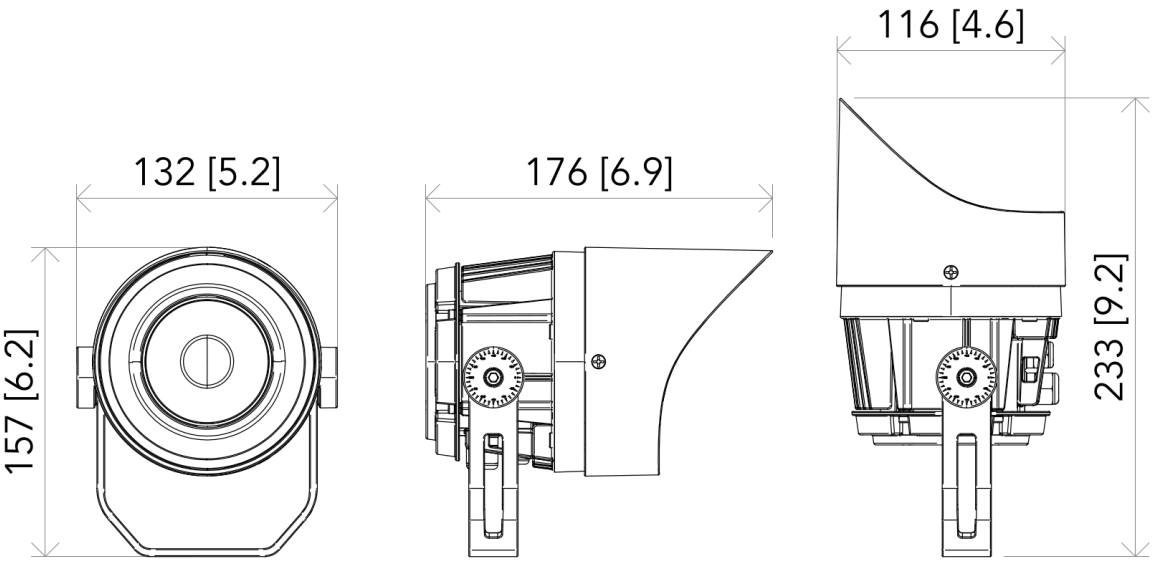

PROLIGHTS		Drawing number / Disegno numero: 01	
Title / Titolo: ARCSPOT DOT		Draw description / Descrizione disegno: With accessories	
Date / Date: 07-02-2024	Revision N. / Versione N°: 001	Sheet / Foglio: 01 of / di 01	Checked / Controllato

Duplication of this drawing, either full or in part, is strictly prohibited without prior written authorization of Music&Lights
Questo disegno non può essere copiato, riprodotto, mostrato a terzi senza autorizzazione della Music&Lights

Downloaded on 26/11/2026 - data may be provisional: features, specifications and appearance are subject to change without notice

PHOTOMETRICS

Full On - Native Optic - 5Deg

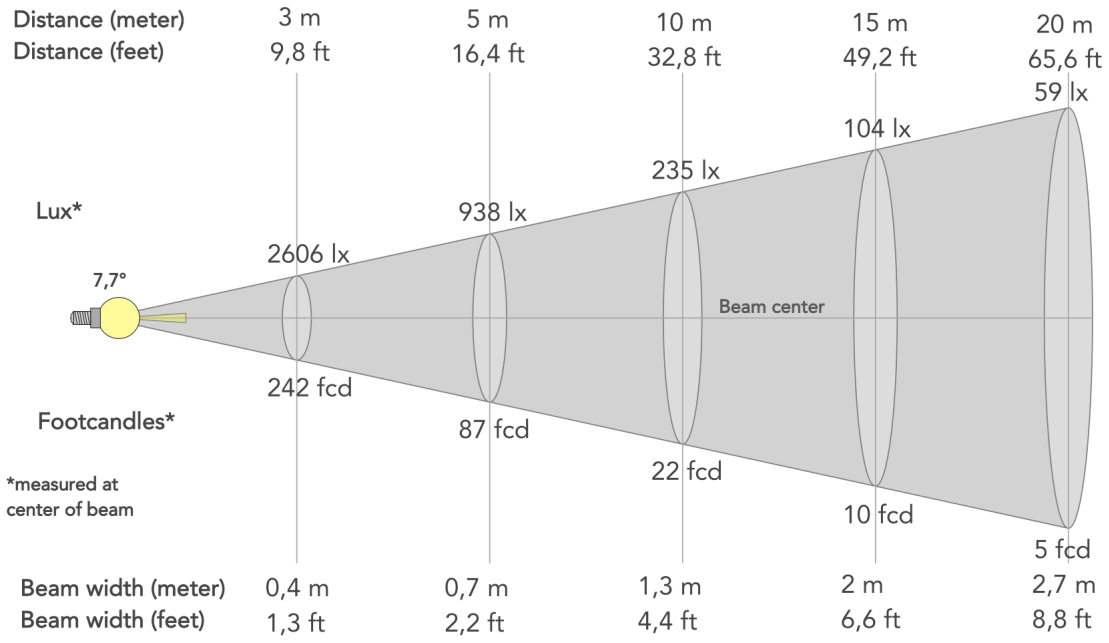

Beam angle (50%): **7.7°**	Field angle (10%): **13.9°**	Cut-off angle (2.5%): **20.6°**

Downloaded on 26/11/2026 - data may be provisional: features, specifications and appearance are subject to change without notice