ArcSpot XSFC

ORDER CODE: ARCSPOTXSFCGY



SOURCE	IP RATING	WEIGHT
3 x 4W RGB + Warm White LED	IP66 for outdoor installations	1,0kg / 2.2lbs

TECHNICAL SPECIFICATIONS

LIGHT SOURCE

Source:	3 x 4W RGB + Warm White LED
Luminous flux:	630 @Full
Lux:	391lx @5 m full
Source life expectancy:	> 90.000 hrs (L70B10 @Ta 25° C / 77° F)

OPTICS

Beam angle:	11°
Field angle:	20°
Additional optics:	see available accessories

COLOUR SYSTEM

Colour wheel:	gel filters included
Macros:	built-in white presets

DYNAMIC EFFECTS

Static mode:	selection of static dimmer, colors and color temperature
Manual mode:	manual adjustment of colour
Auto mode:	built-in programs with execution speed adjustment

CONTROL

Supported Protocols:	DMX512, RDM
DMX channels:	5 / 6 / 9 / 12ch
RDM:	for remote addressing and parameter configuration
Display:	user interface through DATAMASTER external coder (not included)
Master/Slave:	for synchronised operation of more units linked in a chain
Other:	16bit control of dimmer and colour

ELECTRONICS

Dimmer:	linear 0 - 100% electronic dimmer
Dimmer curves:	4 selectable dimming modes available
Strobe / shutter:	1-30 Hz, electronic
Selectable PWM:	600 to 25,000 Hz (selectable steps)
Firmware upgrade with:	via DMX with UPBOXPRO/ UPBOX1 (not included)

CONNECTIONS

Power connection:	53 cm moulded IP power IN connector
Signal connection:	53 cm moulded IP signal IN/OUT connectors
Adaptors:	XLR and BARE END 16A adaptors included

ELECTRICAL

Mains power supply:	100-240V - 50/60Hz
Max power consumption (230V):	17W
Standby power:	0,5 W
Power factor:	> 0,9

PHYSICAL

IP rating:	IP66 for outdoor installations
IK rating:	IK07 impact rating
Housing:	Sturdy die-cast aluminium body, scratch-resistant C5M Marine Grade paint (as standard)
Finish:	basalt grey (RAL 7012)
Operating temperature:	Ta -20 to +45 °C (-4 to +113 °F)
Dimensions (WxHxD):	132x156x99mm
Weight:	1,0kg

INSTALLATION

Suspension and fixing:	bracket for hanging and floor positioning

CERTIFICATIONS / REPORTS

Compliance:	CE, RCM, FCC, cTUVus

Downloaded on 29/11/2026 - data may be provisional: features, specifications and appearance are subject to change without notice

TECHNICAL SPECIFICATIONS

BOX CONTENT

1 x ARCSPOTXSFC

1 x 0,3 meters 3G1mmq power cable (BARE END - IP connection adapter)

1 x 5p XLR - IP connection male adapter

1 x 5p XLR - IP connection female adapter

Downloaded on 29/11/2026 - data may be provisional: features, specifications and appearance are subject to change without notice

ACCESSORIES & RELATED PRODUCTS



ARCSPK
ArcSpot Series Ground Spike, RAL7012 with C5M (Marine Grade)



PLYPC3010E73D
Y splitter power cable 3x1.0 mm2, IP67 connectors (1 IN + 2 OUT), 80 cm lenght



THR209S6D
4-Way junction box type H, 3 poles, IP66/IP68



ASLENS10
Lens for ARCSPOT series, 10°



ASLENS25
Lens for ARCSPOT series, 25°



ARXSFILTER40
Light diffusion filter for ARCSPOTXS series, 40°



ARXSFILTER1060
Light diffusion filter for ARCSPOTXS series, 10°x60° (VxH)



ARXSHSNOOTGY
Half snoot for ARCSPOTXS series, RAL 7012



ASPOTOUTERCASEXS
Outercase box for ground installation for ARCSPOTXS series



AWEXAC2L05
Extension IP67 power cable, IPpowercon-F -> IPpowercon-M, 5m



AWEXAC2L20
Extension IP67 power cable, IPpowercon-F -> IPpowercon-M, 20m



AWEXDC2L05
Extension IP67 signal cable, IPdataCON-F -> IPdataCON-M, 5m



AWEXDC2L20
Extension IP67 signal cable, IPdataCON-F -> IPdataCON-M, 20m



AWEXDC1221ADP
Signal adapter kit from AWEXDC1 series to AWEXDC2 series and vice versa



UPBOXPRO
Firmware uploader kit, USB IN, 5-pin XLR DMX OUT connector



DATAMASTER
RDM/DMX tool,cable tester, 5p XLR connectors,pouch, charging cable, XLR adapters



THR390S3T
3-Way junction connector, 'T' type, 3 Poles, IP68



AETHERLINK
IP66 rated 1 Universe CRMX wireless transceiver for permanent outdoor installation



ASLENS15
Lens for ARCSPOT series, 15°



ARXSFILTER20
Light diffusion filter for ARCSPOTXS series, 20°



ARXSFILTER60
Light diffusion filter for ARCSPOTXS series, 60°



ARXSFILTER3060
Light diffusion filter for ARCSPOTXS series, 30°x60° (VxH)



ARXSHLOUVREGY
Honeycomb louvre for ARCSPOTXS series, RAL 7012



AWEXAC2L03
Extension IP67 power cable, IPpowercon-F -> IPpowercon-M, 3m



AWEXAC2L10
Extension IP67 power cable, IPpowercon-F -> IPpowercon-M, 10m



AWEXDC2L03
Extension IP67 signal cable, IPdataCON-F -> IPdataCON-M, 3m



AWEXDC2L10
Extension IP67 signal cable, IPdataCON-F -> IPdataCON-M, 10m



AWEXAC12ADP
Power adapter from AWEXAC1 cable series to AWEXAC2 cable series



IPTESTBOX
Portable vacuum and pressure tester for ProLights IP fixtures

TECHNICAL DRAWINGS

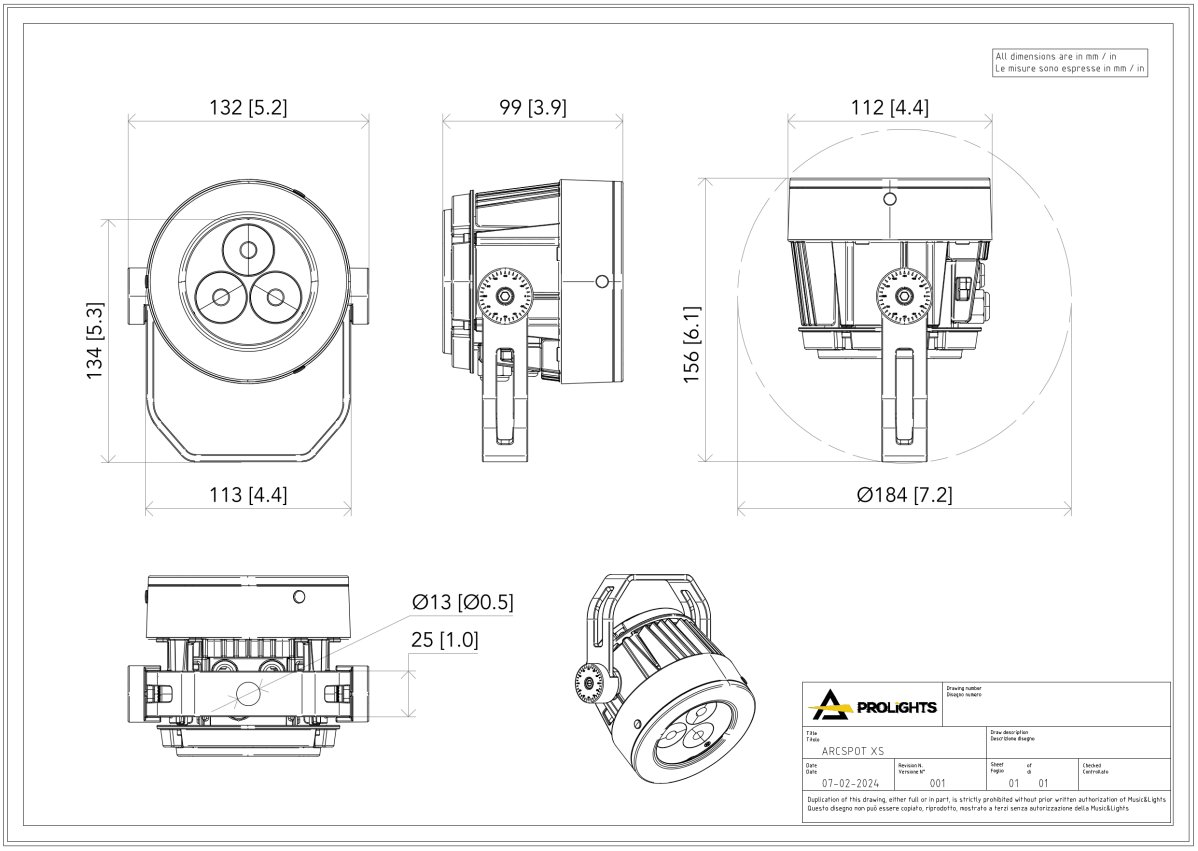

All dimensions are in mm / in
Le misure sono espresse in mm / in

ARXSHLOUVRE

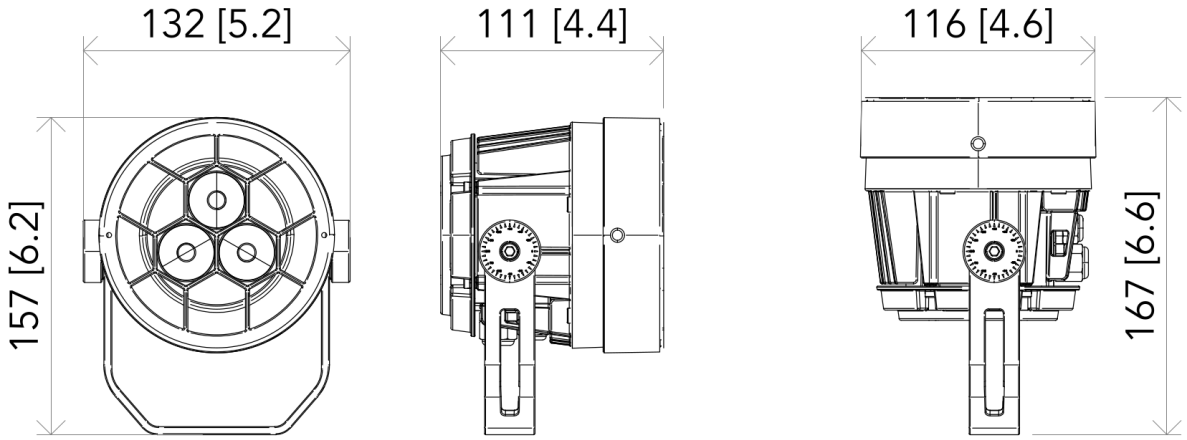

ARXSHSNOOT

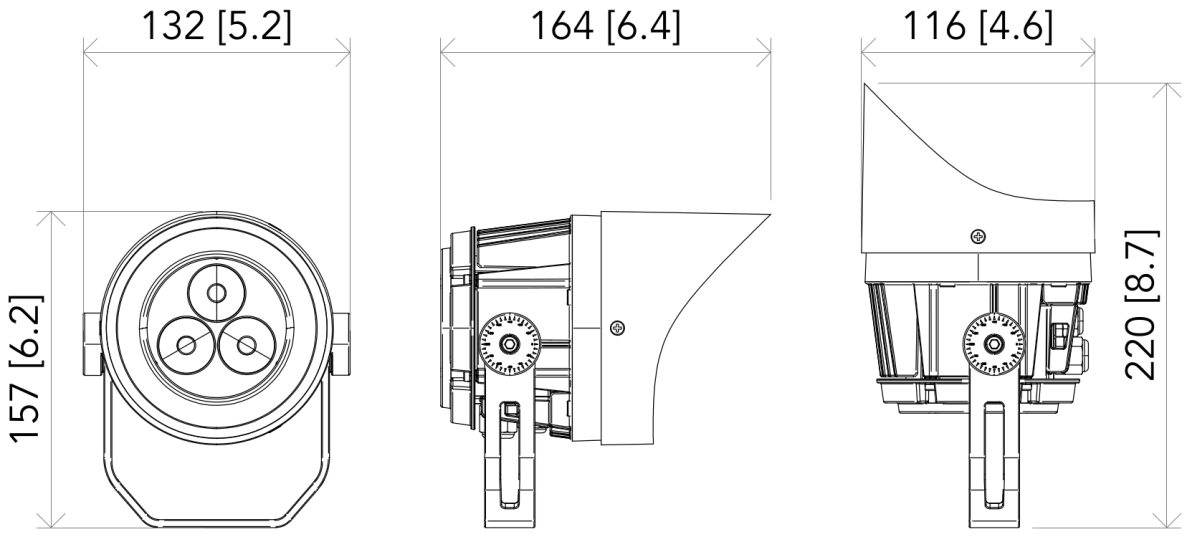

PROLIGHTS		Drawing number / Disegno numero: 01	
Title / Titolo: ARCSPOT XS		Draw description / Descrizione disegno: With accessories	
Date / Date: 07-02-2024	Revision N. / Versione N°: 001	Sheet / Foglio: 01 of / di 01	Checked / Controllato

Duplication of this drawing, either full or in part, is strictly prohibited without prior written authorization of Music&Lights
Questo disegno non può essere copiato, riprodotto, mostrato a terzi senza autorizzazione della Music&Lights

PHOTOMETRICS

Full On - 10°

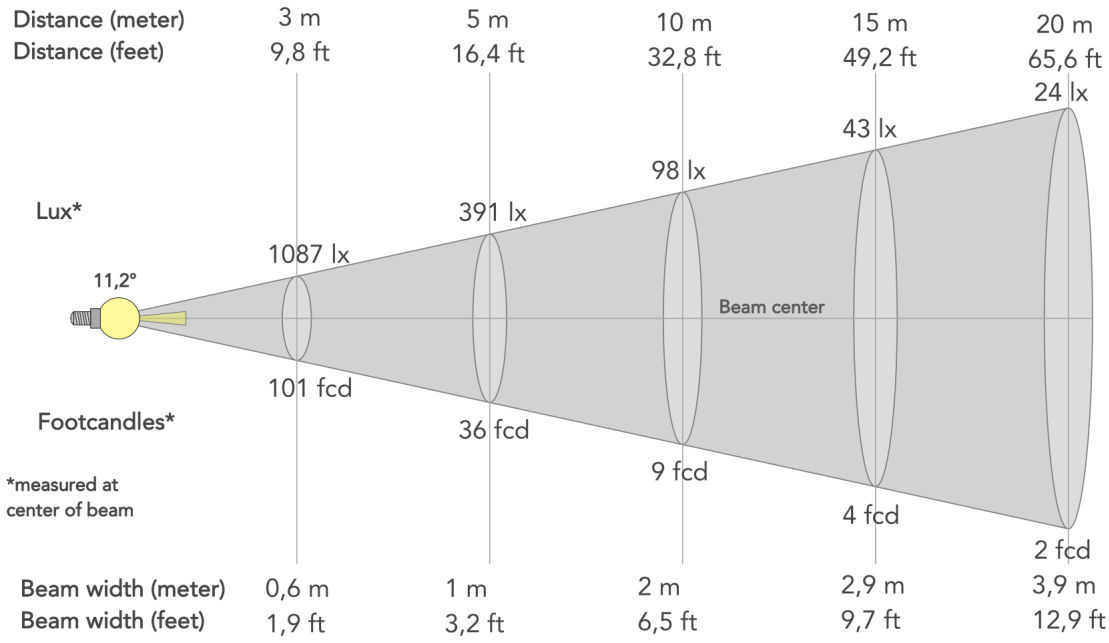

Beam angle (50%): **11.2°**	Field angle (10%): **20.2°**	Cut-off angle (2.5%): **30.5°**

Full On - 15°

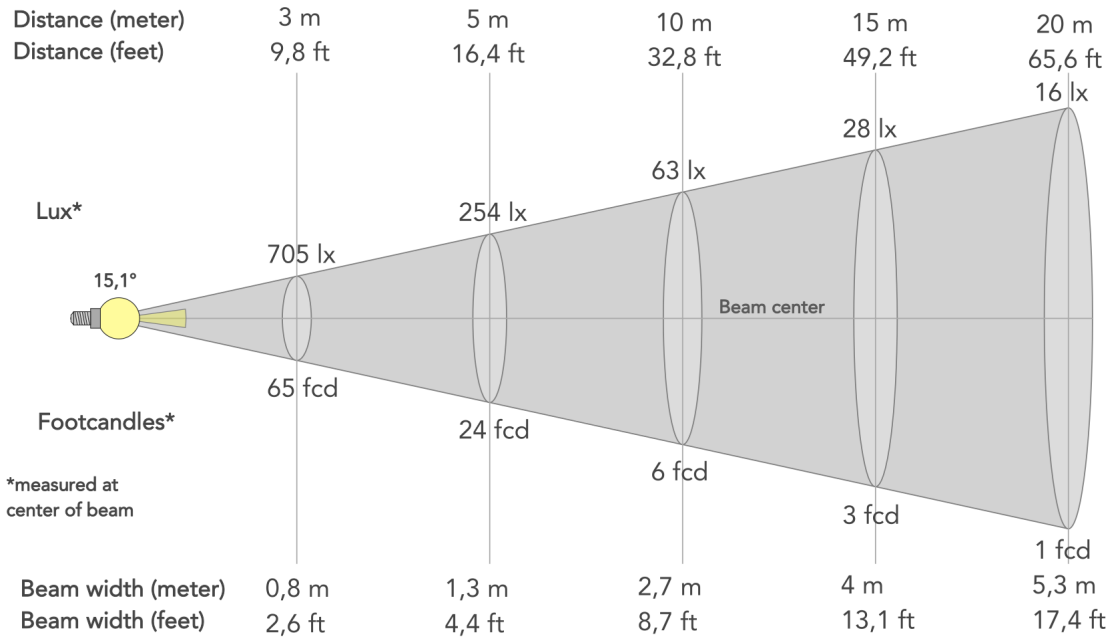

Beam angle (50%): **15.1°**	Field angle (10%): **26.7°**	Cut-off angle (2.5%): **39.1°**

Full On - 25°

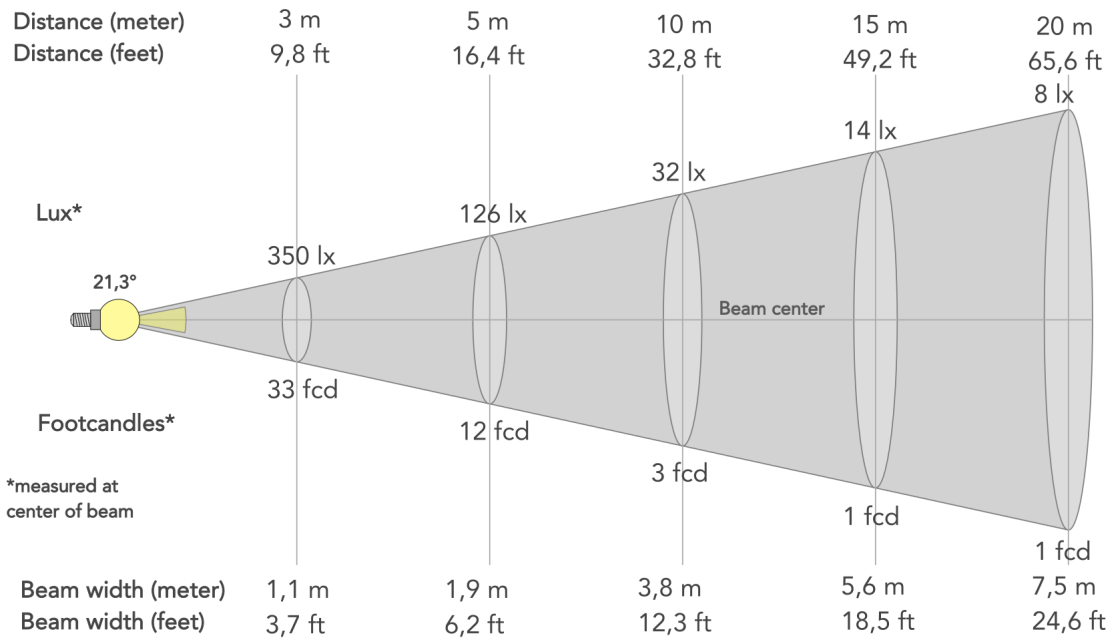

Beam angle (50%): **21.3°**	Field angle (10%): **37.7°**	Cut-off angle (2.5%): **55.7°**

Downloaded on 29/11/2026 - data may be provisional: features, specifications and appearance are subject to change without notice