ArenaCob 4FC

ORDER CODE: ARENACOB4FC



SOURCE
4x75W RGBW LEDs

IP RATING
IP65 for temporary outdoor use

WEIGHT
8kg / 17.64lbs

LUMINOUS FLUX (MAX)
5'393 lm

Downloaded on 26/11/2026 - data may be provisional: features, specifications and appearance are subject to change without notice

TECHNICAL SPECIFICATIONS

LIGHT SOURCE

Source:	4x75W RGBW LEDs
Luminous flux:	(24°) 5'393 lm - (40°) 6.260
Lux:	(24°) 2'413lx @3 m full
Lux:	(40°) 891lx
Source life expectancy:	> 50.000 h

OPTICS

Beam angle:	(inc) 24° - (opt) 40°
Field angle:	46°
Pixel pitch:	150mm
Lens diameter:	100mm
Lens type:	parabolic reflector in combination with HD fresnel lens
Additional optics:	40°(opt) - 32° without magnetic lens
Other:	magnetic replacement of front lens

COLOUR SYSTEM

CCT:	CCT control through dedicated DMX channel
White presets:	2.000 K ~ 8.000K
Colour wheel:	virtual colour wheel with macros

DYNAMIC EFFECTS

Pixel patterns:	pre-programmed static and dynamic pixel patterns
FX generator:	adjustable foreground/background colour, index, speed, direction
Static mode:	selection of static colour
Manual mode:	manual adjustment of colour
Auto mode:	built-in programs with execution speed adjustment
Special features:	HALO DWE dimming and amber-shift simulation

CONTROL

Supported Protocols:	DMX512, RDM
DMX channels:	HALO 1 / 4 channel - STD 4 / 6 / 15 channel - EXT 16 / 21 / 27ch
Pixel control:	pixel2pixel control
RDM:	for remote addressing and parameter configuration
Display:	black OLED touch display
Master/Slave:	for synchronised operation of more units linked in a chain

ELECTRONICS

Dimmer:	linear 0 - 100% electronic dimmer
Dimmer curves:	4 selectable dimming modes available
Strobe / shutter:	1 - 28 Hz, electronic
Display battery:	included, self-charging battery backup
Firmware upgrade with:	via DMX with UPBOXPRO/ UPBOX1 (not included)

CONNECTIONS

Power connection:	Seetronic powerCON waterproof IN/OUT connectors
Signal connection:	Seetronic XLR 5p IN/OUT connectors

ELECTRICAL

Mains power supply:	100-240V - 50/60Hz
Max power consumption (230V):	227W
Output (at 230V):	11 units on a single power line
Max power consumption (120V):	230W
Output (at 120V):	8 units on a single power line

Downloaded on 26/11/2026 - data may be provisional: features, specifications and appearance are subject to change without notice

TECHNICAL SPECIFICATIONS

PHYSICAL

IP rating:	IP65 for temporary outdoor use
Cooling:	fan-free with natural convection
Housing:	Sturdy die-cast aluminium body
Finish:	black
Operating temperature:	Ta -20 to +45 °C (-4 to +113 °F)
Dimensions (WxHxD):	619x167x264mm
Weight:	8kg

BOX CONTENT

1 x ARENACOB4FC

1 x 1,5 meters 3G1,5mmq power cable (BARE END - SEETRONIC POWERCON TRUE1 IP65 power connector)

INSTALLATION

Suspension and fixing:	bracket for hanging and floor positioning
Hardware on-board:	on board mechanics for modular assembly of multiple fixtures

CERTIFICATIONS / REPORTS

Compliance:	CE, UKCA, RCM, cTUVus, FCC

ACCESSORIES & RELATED PRODUCTS



ARENACOBHBS
ARENACOB's hanging bracket for suspension



ARENACOBOPT24
Magnetic optic for ARENACOB, 24°



ARENACOBOPT40
Magnetic optic for ARENACOB, 40°



FCLARENACOBR2
Flight case for 6 ARENACOB



UPBOXPRO
Firmware uploader kit, USB IN, 5-pin XLR DMX OUT connector

Downloaded on 26/11/2026 - data may be provisional: features, specifications and appearance are subject to change without notice

TECHNICAL DRAWINGS

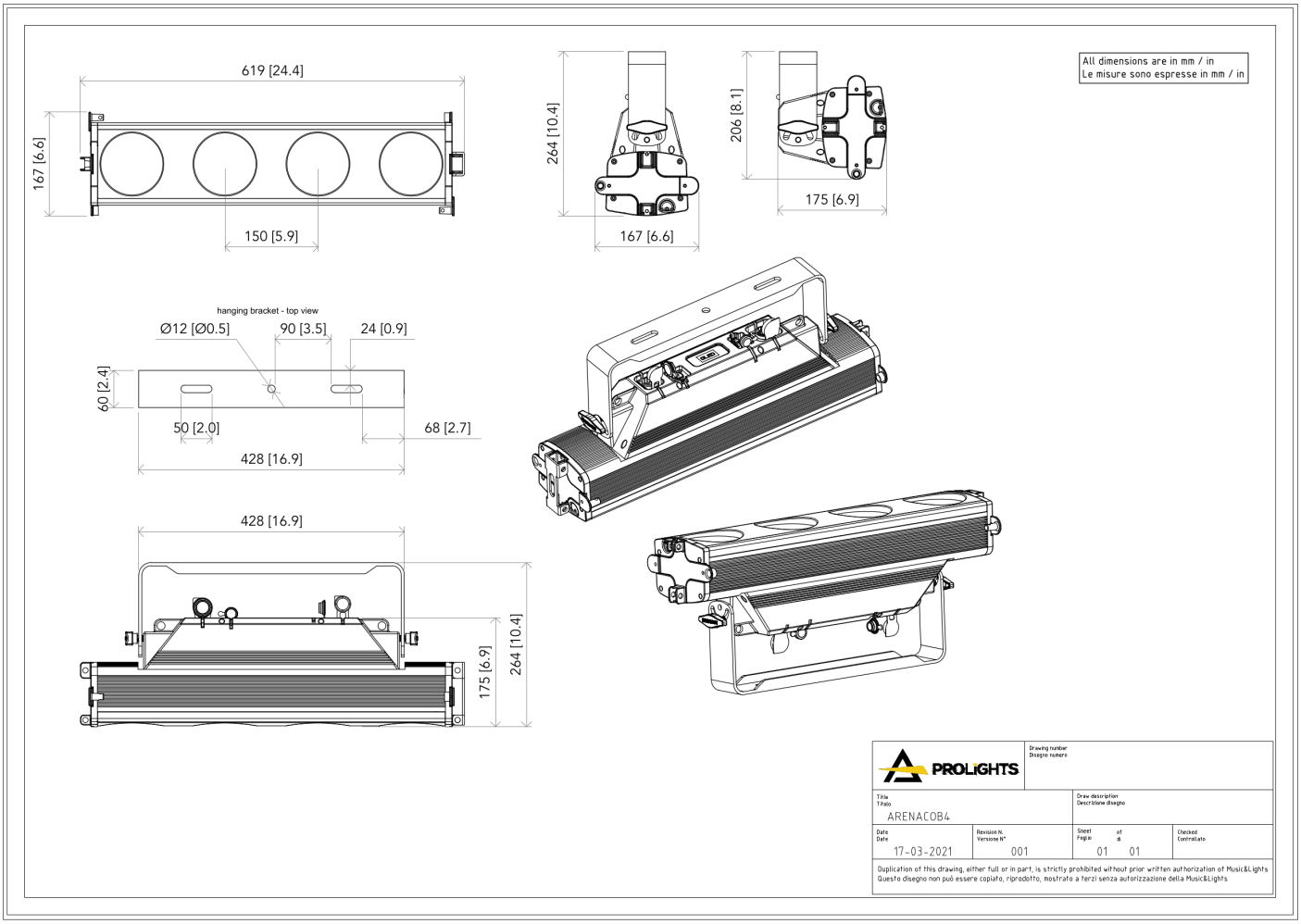

PHOTOMETRICS

Full On - Native Lens

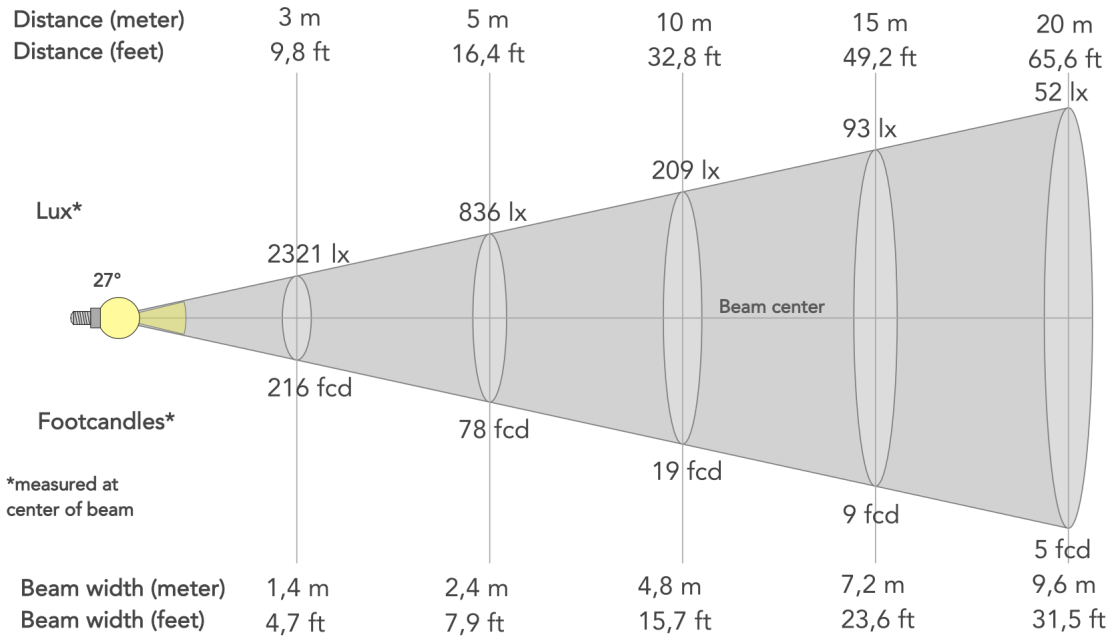

Beam angle (50%): **27°**	Field angle (10%): **47.5°**	Cut-off angle (2.5%): **67.4°**

MUSIC & LIGHTS S.r.l. | Via A. Olivetti, snc
04026 - Minturno (LT) ITALY | info@prolights.it
Tel: +39 0771 72190 | **prolights.it**
VAT No. IT 02057590594

Downloaded on 26/11/2026 - data may be provisional: features, specifications and appearance are subject to change without notice