Arshsnoot

ORDER CODE: ARSHSNOOTGY



TECHNICAL DRAWINGS

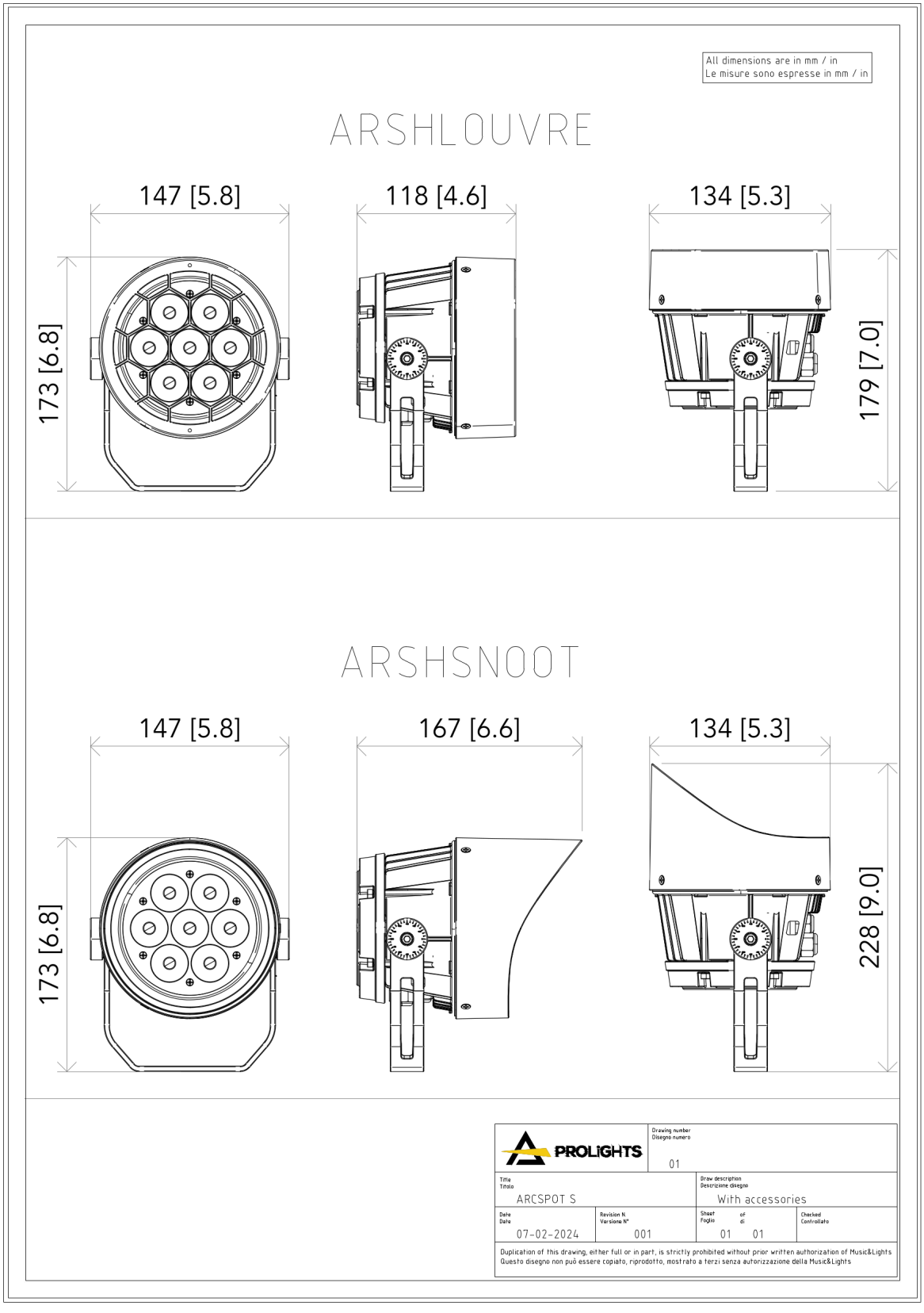

MUSIC & LIGHTS S.r.l. | Via A. Olivetti, snc
04026 - Minturno (LT) ITALY | info@prolights.it
Tel: +39 0771 72190 | **prolights.it**
VAT No. IT 02057590594

Downloaded on 27/11/2026 - data may be provisional: features, specifications and appearance are subject to change without notice