Aspotoutercase

ORDER CODE: **ASPOTOUTERCASEDOT**



VERSIONS

	Code
	**ASPOTOUTERCASEDOT**
	ASPOTOUTERCASEXS
	ASPOTOUTERCASES
	ASPOTOUTERCASEM
	ASPOTOUTERCASEL
	ASPOTOUTERCASEXL

MAIN FEATURES

- IK09
- Manual tilt adjustment
- Tilt range -10°/+10°

TECHNICAL SPECIFICATIONS

PHYSICAL

IK rating:	IK09 impact rating
Finish:	mirror finishing

TECHNICAL DRAWINGS

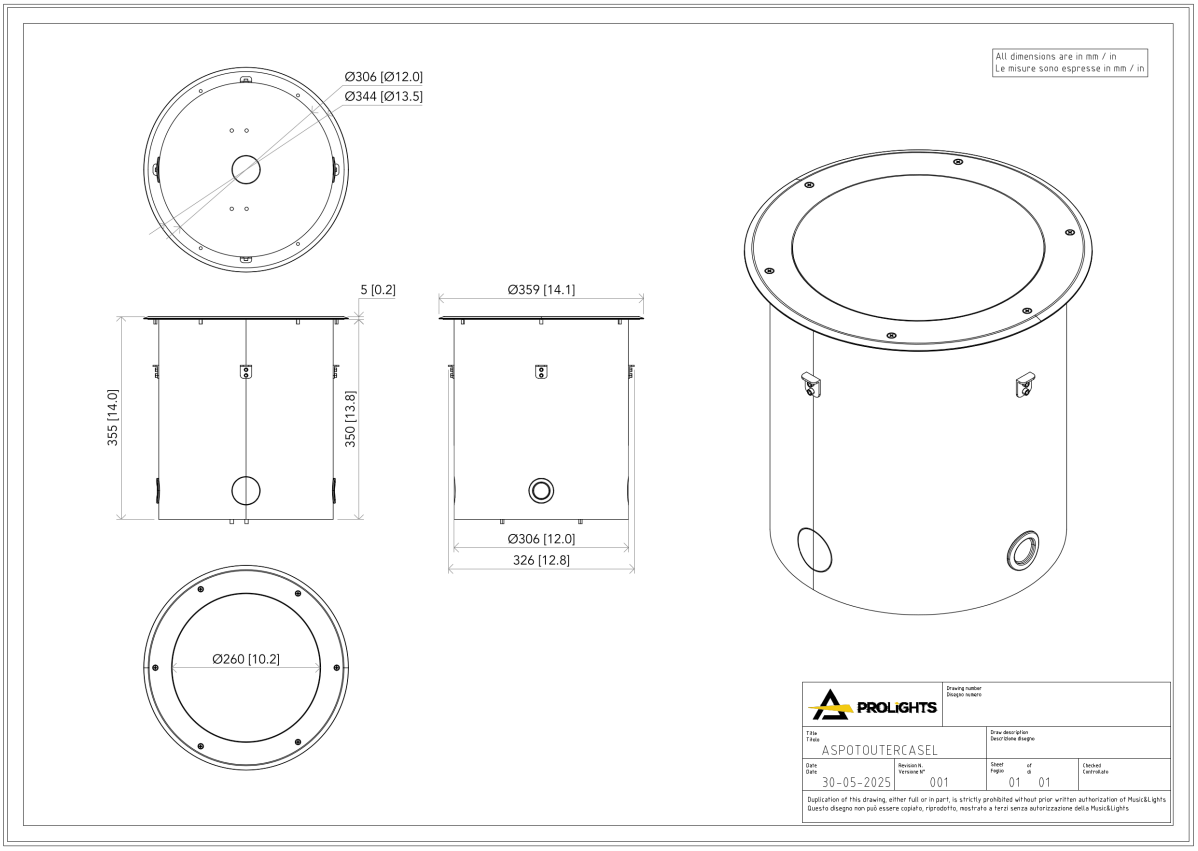

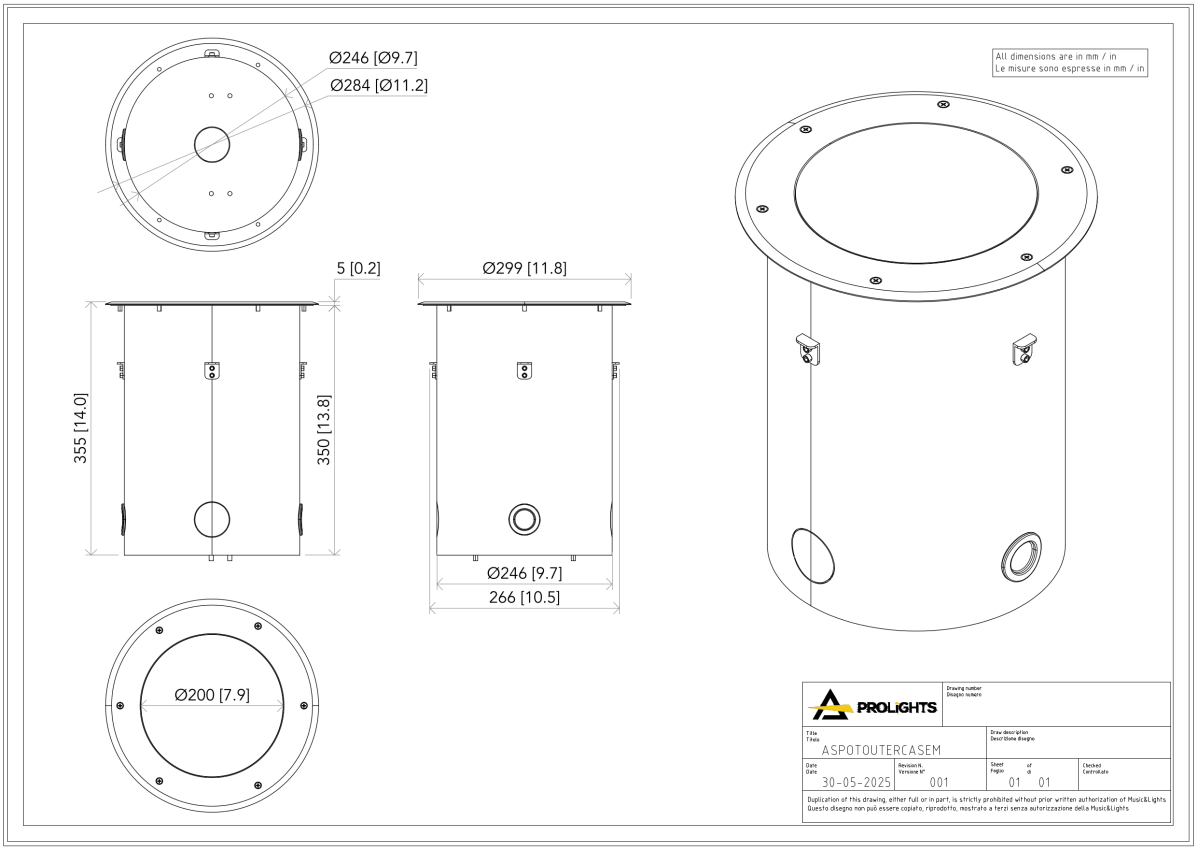

Downloaded on 27/11/2026 - data may be provisional: features, specifications and appearance are subject to change without notice

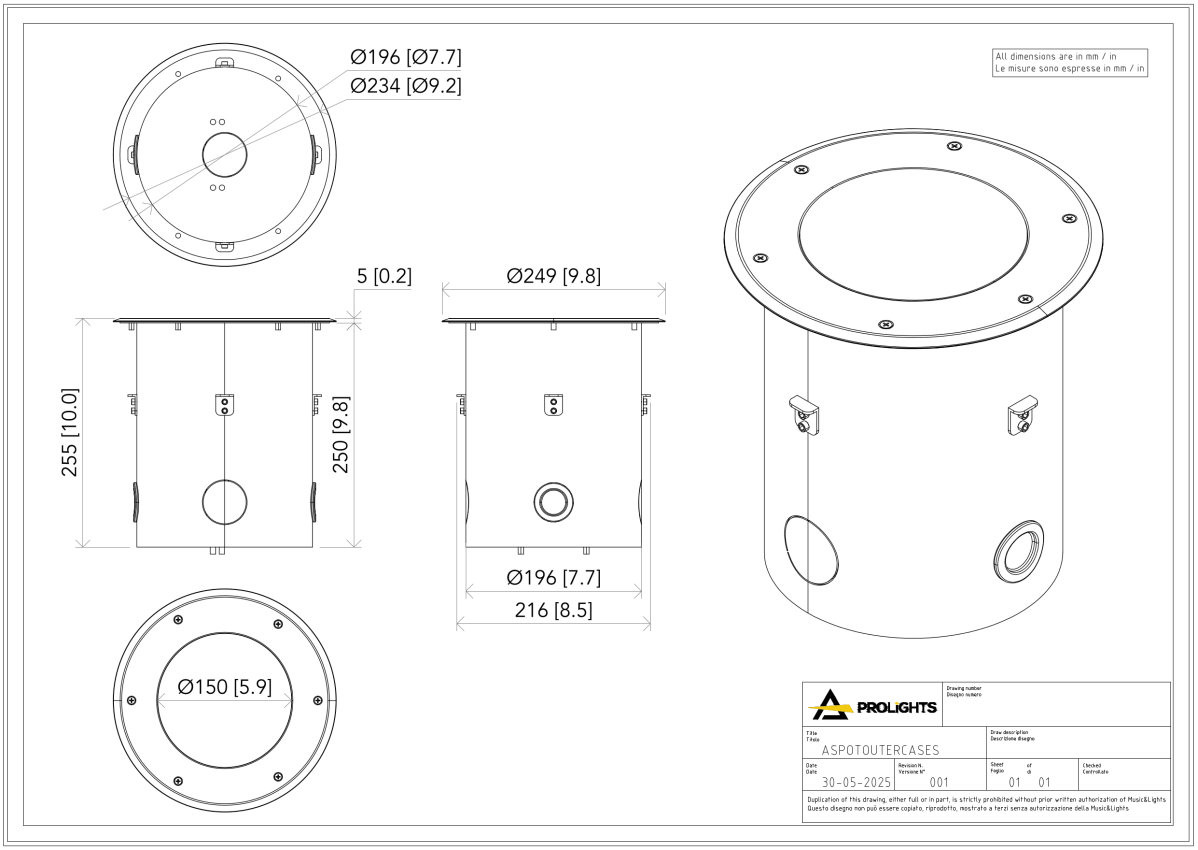
Ø196 [Ø7.7]
Ø234 [Ø9.2]
All dimensions are in mm / in
Le misure sono espresse in mm / in
5 [0.2]
Ø249 [9.8]
255 [10.0]
250 [9.8]
Ø196 [7.7]
216 [8.5]
Ø150 [5.9]
PROLIGHTS
ASPOTOUTERCASES
30-05-2025
001
01 01

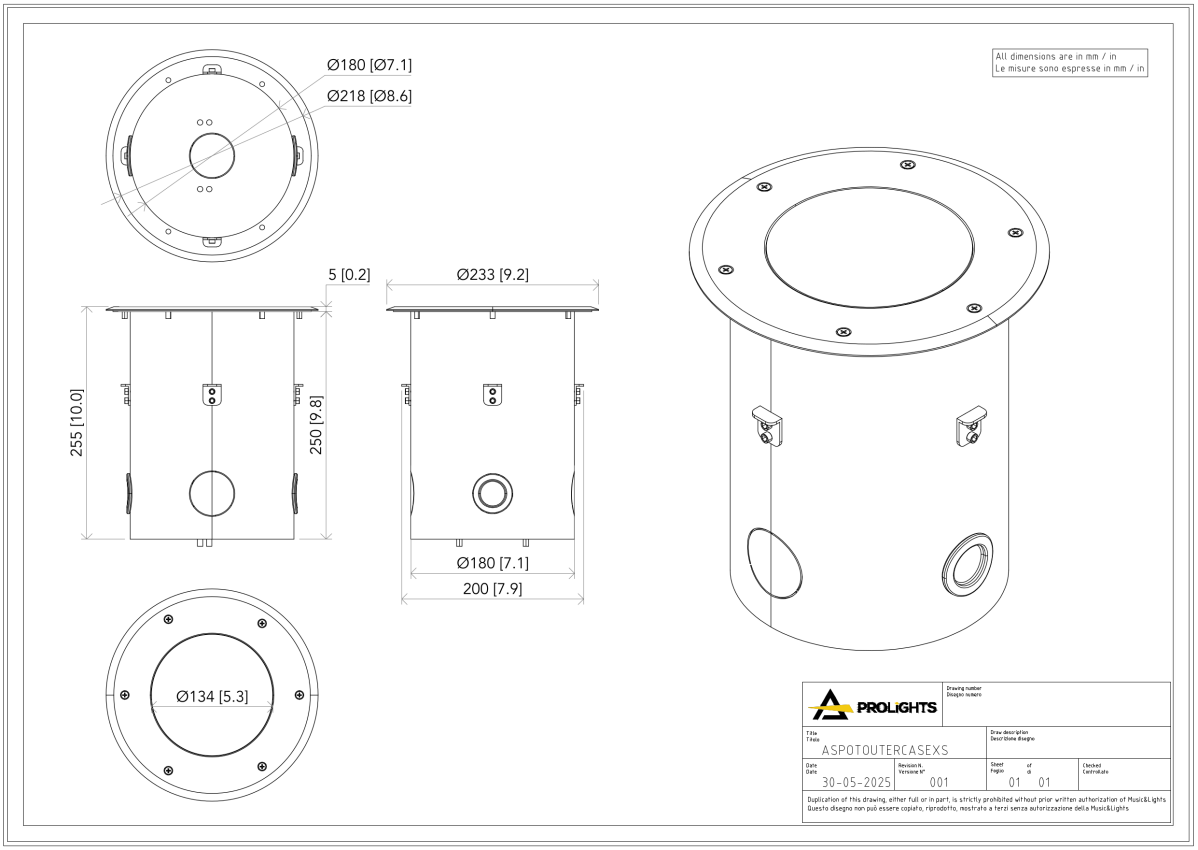
Ø180 [Ø7.1]
Ø218 [Ø8.6]
All dimensions are in mm / in
Le misure sono espresse in mm / in
5 [0.2]
Ø233 [9.2]
255 [10.0]
250 [9.8]
Ø180 [7.1]
200 [7.9]
Ø134 [5.3]
PROLIGHTS
ASPOTOUTERCASEXS
30-05-2025
001
01 01