Astra Blade100IP

ORDER CODE: ASTRABLADE100IP



SOURCE	ZOOM RANGE	IP RATING
16x40W RGBW Osram Ostar LEDs	**4,3° - 39,4° motorised linear zoom**	**IP65 for temporary outdoor use (*)**

WEIGHT	LUMINOUS FLUX (MAX)
27,4kg / 60.41lbs	**12'028 lm**

TECHNICAL SPECIFICATIONS

LIGHT SOURCE

Source:	16x40W RGBW Osram Ostar LEDs
Additional source:	2 VW linear LED strips with 32 individual sections (16 on top + 16 on bottom)
Luminous flux:	(4,3°) 12'028 lm - (39,4°) 15'262 @Full
Lux:	(4,3°) 50'695 lx - (39,4°) 3'056lx @5 m full
Source life expectancy:	> 50.000 hrs (L70B10 @Ta 25° C / 77° F)

OPTICS

Zoom range:	4,3° - 39,4° motorised linear zoom
Lens diameter:	50mm square shape
Lens type:	high-quality glass lens optics

COLOUR SYSTEM

Colour control:	CCT, RGBW, HSI, Colour Macros
CCT:	CCT control, + / - green correction, tungsten emulation
Colour wheel:	virtual colour wheel with macros
Other:	CCT range: (pixels) 2.800K / 10.000K - (strips) 2.700K / 8000K

DYNAMIC EFFECTS

Control Resolution:	16-bit dimmer and color control
Pixel patterns:	pre-programmed static and dynamic pixel patterns
FX generator:	adjustable foreground/background colour, index, speed, direction
Static mode:	selection of static dimmer, colors and color temperature
Manual mode:	manual adjustment of colour

CONTROL

Supported Protocols:	DMX512, RDM, ArtNet, sACN, CRMX
Pixel control:	16 px (main) + 32 px (strips) pixel2pixel control
RDM:	for remote addressing and parameter configuration
Display:	LCD high resolution colour display with autoflip
Master/Slave:	for synchronised operation of more units linked in a chain

MOVEMENT

Tilt:	200° - 16-bit resolution
Position feedback:	automatic repositioning after external movement
Pan / tilt lock:	for transport and maintenance

Downloaded on 27/11/2026 - data may be provisional: features, specifications and appearance are subject to change without notice

TECHNICAL SPECIFICATIONS

ELECTRONICS

Dimmer:	linear 0 - 100% electronic dimmer
Dimmer curves:	5 selectable dimming modes available
Strobe / shutter:	1 - 30 Hz, electronic
Display battery:	included, self-charging battery backup
Selectable PWM:	1,000 to 25,000 Hz (selectable steps)
Firmware upgrade with:	via DMX with UPBOXPRO/ UPBOX1 (not included) or via Ethernet with DMX-Workshop

CONNECTIONS

Power connection:	Seetronic powerCON TRUE IP65 IN/OUT
Signal connection:	IP65 Seetronic XLR 5p IN/OUT connectors
Wireless Connection:	integrated LumenRadio TiMo FX RDM - CRMX and W-DMX compatible
Data connection:	IP65 Art-Net RJ45 IN/OUT
EtherFlow:	Ethernet pass-through switch that preserves network connectivity even when the fixture is unpowered

ELECTRICAL

Mains power supply:	100-240V - 50/60Hz
Max power consumption (230V):	strobe: 1.000 W (peak) - wash: 750W
Output (at 230V):	2 units on a single power line
Standby power:	43 W
Power factor:	> 0,94

PHYSICAL

IP rating:	IP65 for temporary outdoor use (*)
Cooling:	heat pipe with low-noise fan
Housing:	Weatherproof IP65 construction with die-cast magnesium alloy
Finish:	black
Operating temperature:	Ta -20 to +45 °C (-4 to +113 °F)
Dimensions (WxHxD):	996x336x175mm
Weight:	27,4kg

INSTALLATION

Suspension and fixing:	any position with quick-lock Omega brackets
Hardware on-board:	anchor points on the front for accessory mounting

CERTIFICATIONS / REPORTS

Compliance:	CE, RCM, FCC, cTUVus

(*)

NOTE:	Suitable for permanent outdoor use, provided that installation and periodic maintenance are carried out by qualified technicians.

BOX CONTENT

1 x ASTRABLADE100IP

2 x OS25PLUS

1 x 1,5 meters 3G1,5mmq power cable (BARE END - SEETRONIC POWERCON TRUE1 IP65 power connector)

Downloaded on 27/11/2026 - data may be provisional: features, specifications and appearance are subject to change without notice

ACCESSORIES & RELATED PRODUCTS



FCLASTRAB100IP

Flight case for 2 pcs of ASTRABLADE100IP



OS25PLUS

Quick-lock omega bracket, M12 hole



OS400PLUS

400mm quick-lock omega bracket with M12 elongated slot for AstraBlade100IP



OS324PLUS

324mm quick-lock joining omega bracket, M12 elongated slot for the alignment of two AstraBlade100IP



IPTESTBOX

Portable vacuum and pressure tester for ProLights IP fixtures



AETHERBOXONE

IP65 1x universe CRMX transceiver, DMX, Ethernet protocols, Wi-Fi, Bluetooth, battery-ready, POE



UPBOXPRO

Firmware uploader kit, USB IN, 5-pin XLR DMX OUT connector

Downloaded on 27/11/2026 - data may be provisional: features, specifications and appearance are subject to change without notice

TECHNICAL DRAWINGS

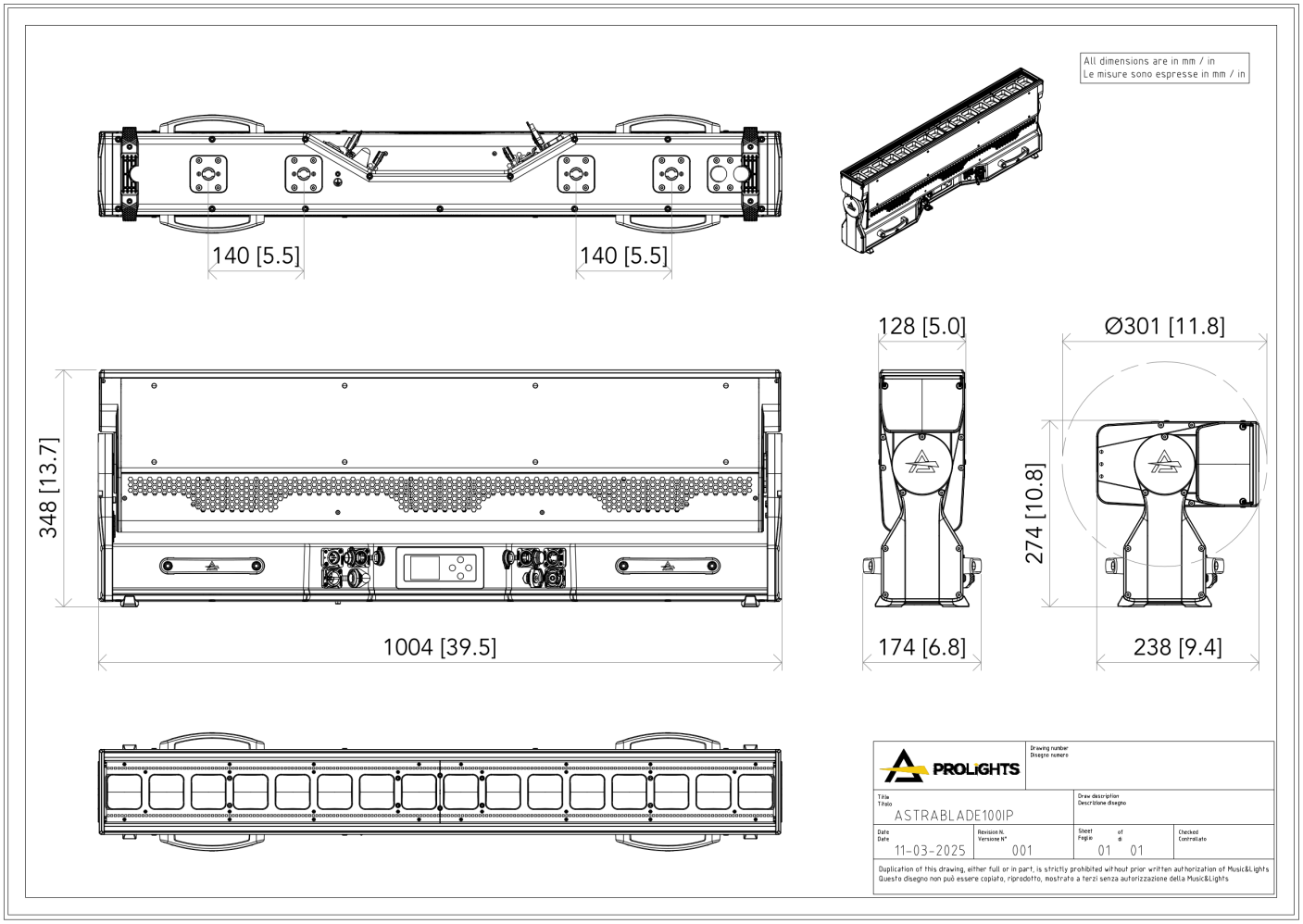

PHOTOMETRICS

Full On - Min Zoom

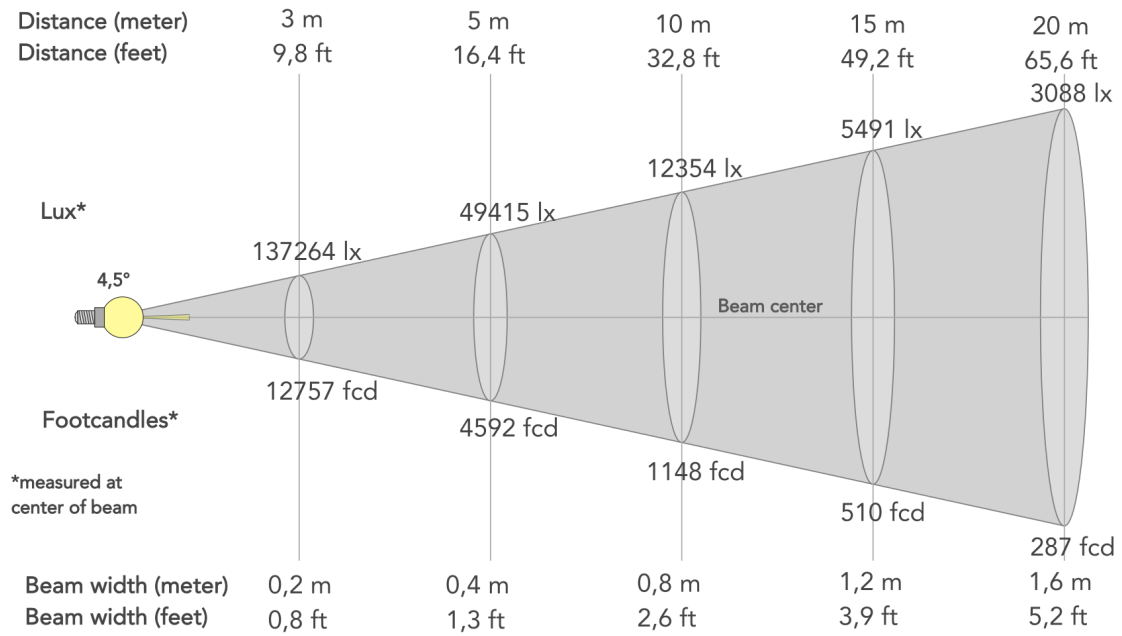

Beam angle (50%): **4.5°**	Field angle (10%): **7.9°**	Cut-off angle (2.5%): **8.6°**

Full On - Max Zoom

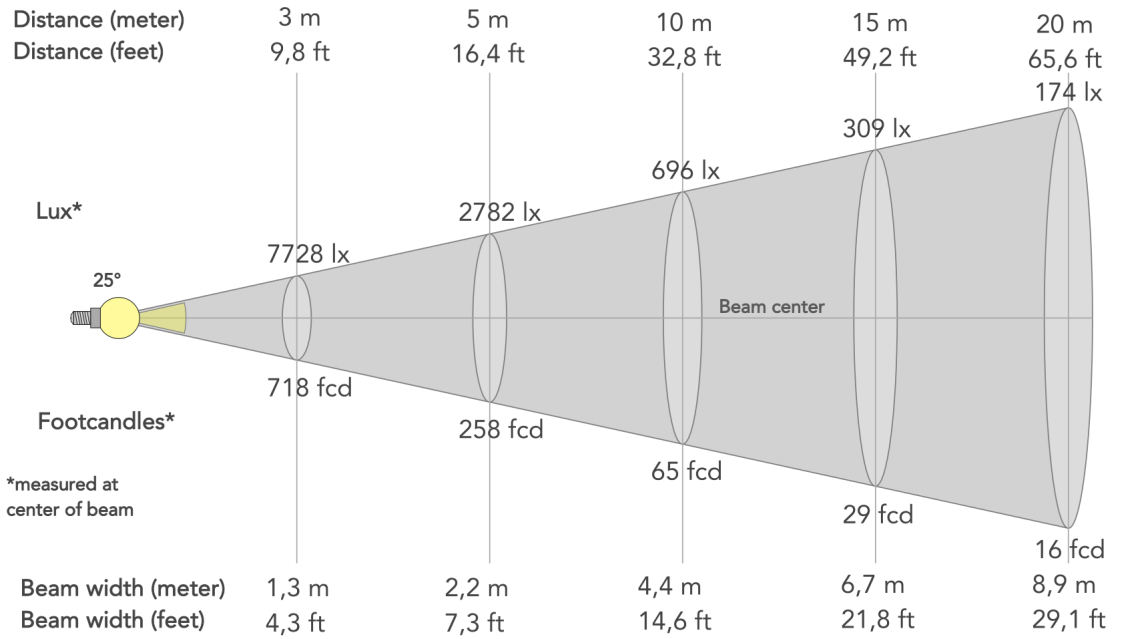

Beam angle (50%): **25°**	Field angle (10%): **39.1°**	Cut-off angle (2.5%): **43.5°**