Astra Profile1200IP

ORDER CODE: ASTRAPROF1200IP



SOURCE

1'400W White LED (driven @1'200W)

ZOOM RANGE

5,4° - 51° motorised linear zoom

IP RATING

IP65 for temporary outdoor use (*)

WEIGHT

55kg / 121.25lbs

LUMINOUS FLUX (MAX)

54'599 lm

TECHNICAL SPECIFICATIONS

LIGHT SOURCE

Source:	1'400W White LED (driven @1'200W)
Source CCT:	7.000K
Luminous flux:	(5,4°) 21'906 lm - (50,9°) 54'599 lm @Full
Lux:	(5,4°) 125'003 lx (50,9°) 4'008lx @5 m full
CRI:	> 70 (CRI > 90 with High CRI filter on color wheel)
Source life expectancy:	> 50.000 hrs (L70B10 @Ta 25° C / 77° F)

OPTICS

Zoom range:	5,4° - 51° motorised linear zoom
Lens diameter:	185mm
Lens type:	HD anti-reflection lenses with achromatic coating
Focus:	motorised 16-bit

COLOUR SYSTEM

Colour mixing:	linear CMY
CCT:	linear CTO correction 2.700 K ~ 7.000 K
Colour wheel:	High CRI filter + 5 colour filters + open

DYNAMIC EFFECTS

Control Resolution:	16-bit dimmer control
Shutter system:	4 shutter blades with position and ±30° angle adjustment, ±45° rotation of the complete framing system
Animation wheel:	animation wheel with CW and CCW rotation
FX generator:	prisms overlap for spectacular aerial effects
Circular prism:	4-f with bi-directional rotation, indexing
Linear prism:	6-f with bi-directional rotation, indexing
Frost:	dual soft-edge and heavy with one interchangeable element
Iris:	5 - 100% motorised iris

GOBOS

Gobo wheel 1:	6 rotating gobos + open, interchangeable, indexing
Gobo size:	preliminary data: outer: 30 mm - image: 25 mm - thickness: 1,1 mm
Gobo wheel 2:	6 rotating gobos + open, interchangeable, indexing
Gobo size:	preliminary data: outer: 30 mm - image: 25 mm - thickness: 1,1 mm

CONTROL

Supported Protocols:	DMX512, RDM, ArtNet, sACN, CRMX
DMX channels:	45ch
RDM:	for remote addressing and parameter configuration
Display:	Graphic User Interface

Downloaded on 26/11/2026 - data may be provisional: features, specifications and appearance are subject to change without notice

TECHNICAL SPECIFICATIONS

MOVEMENT

Pan:	540° - 16-bit resolution
Tilt:	270° - 16-bit resolution
Position feedback:	automatic repositioning after external movement
Pan / tilt lock:	for transport and maintenance

ELECTRONICS

Dimmer:	linear 0 - 100% electronic dimmer
Dimmer curves:	4 selectable dimming modes available
Strobe / shutter:	1 - 30 Hz, electronic
Display battery:	included, self-charging battery backup
Selectable PWM:	600 to 50,000 Hz (selectable steps)
Firmware upgrade with:	via DMX with UPBOXPRO/ UPBOX2 (not included) or via USB pen drive

CONNECTIONS

Power connection:	Seetronic powerCON TRUE IP65 IN
Signal connection:	IP65 Seetronic XLR 5p IN/OUT connectors
Wireless Connection:	integrated LumenRadio TiMo FX RDM - CRMX and W-DMX compatible
Data connection:	IP65 Art-Net RJ45 IN/OUT
EtherFlow:	Ethernet pass-through switch that preserves network connectivity even when the fixture is unpowered

ELECTRICAL

Mains power supply:	100-240V - 50/60Hz
Max power consumption (230V):	1843W
Output (at 230V):	1 units on a single power line
Standby power:	170 W
Power factor:	> 0,96

CERTIFICATIONS / REPORTS

Compliance:	CE, RCM

PHYSICAL

IP rating:	IP65 for temporary outdoor use (*)
Cooling:	heat pipe with low-noise fan
Housing:	Weatherproof IP65 construction
Finish:	black
Operating temperature:	Ta -20 to +45 °C (-4 to +113 °F)
Dimensions (WxHxD):	539x916x355mm
Weight:	55kg

INSTALLATION

Suspension and fixing:	any position with quick-lock Omega brackets
Hardware on-board:	anchor points on the front for accessory mounting
Transportation:	carrying handles on the base and additional retractable carrying handles on the arms

(*)

NOTE:	Suitable for permanent outdoor use, provided that installation and periodic maintenance are carried out by qualified technicians.

BOX CONTENT

1 x ASTRAPROF1200IP

2 x OSIP30PLUS

1 x Antenna

1 x 1,5 meters 3G2,5mmq power cable (BARE END - SEETRONIC POWERCON TRUE1 IP65 power connector)

Downloaded on 26/11/2026 - data may be provisional: features, specifications and appearance are subject to change without notice

ACCESSORIES & RELATED PRODUCTS



FCLASTRAP1200IP

Flight case for 1 pc of ASTRAPROF1200IP



OSIP30PLUS

Quick-lock omega bracket, M12 hole



IPTESTBOX

Portable vacuum and pressure tester for ProLights IP fixtures



AETHERBOXONE

IP65 1x universe CRMX transceiver, DMX, Ethernet protocols, Wi-Fi, Bluetooth, battery-ready, POE



AETHERBOXONE

IP65 1x universe CRMX transceiver, DMX, Ethernet protocols, Wi-Fi, Bluetooth, battery-ready, POE



UPBOXPRO

Firmware uploader kit, USB IN, 5-pin XLR DMX OUT connector

TECHNICAL DRAWINGS

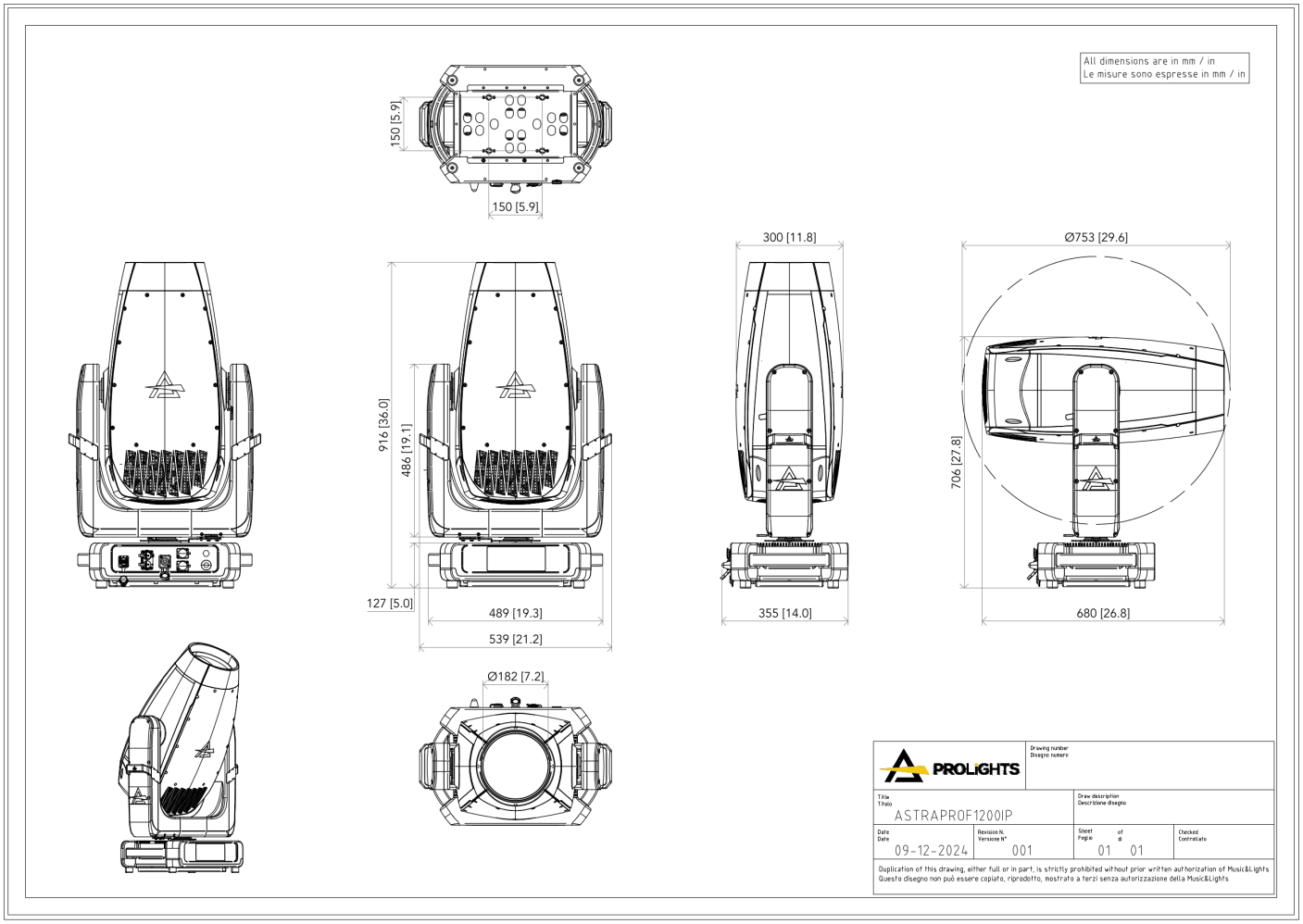

PHOTOMETRICS

Full On - Min Zoom

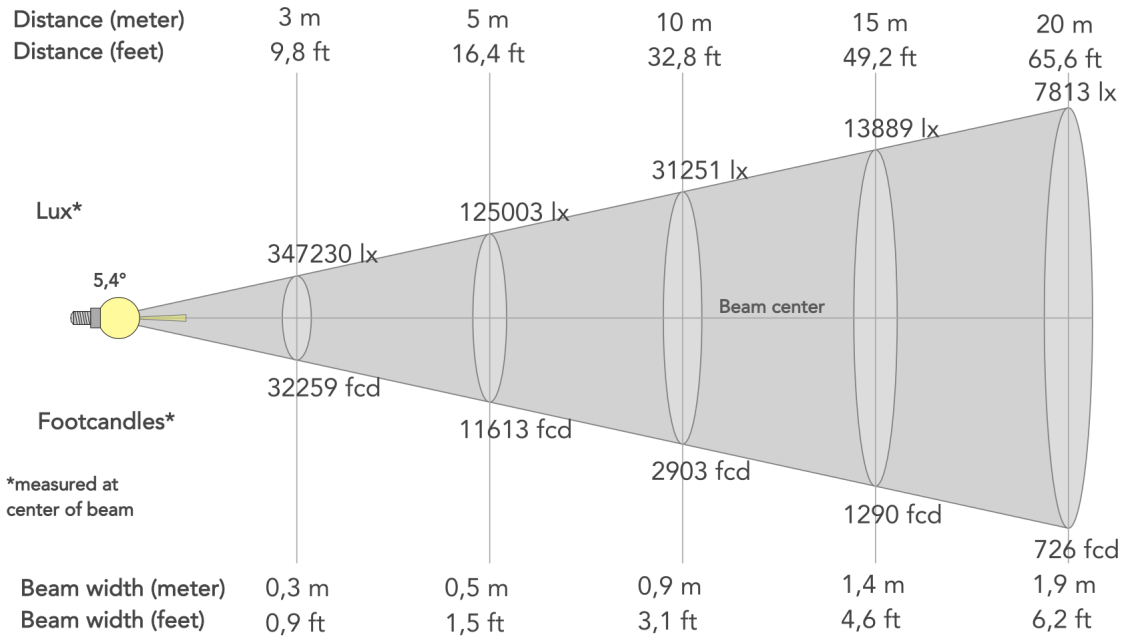

Beam angle (50%): **5.4°**	Field angle (10%): **6.1°**	Cut-off angle (2.5%): **6.3°**

Full On - Max Zoom

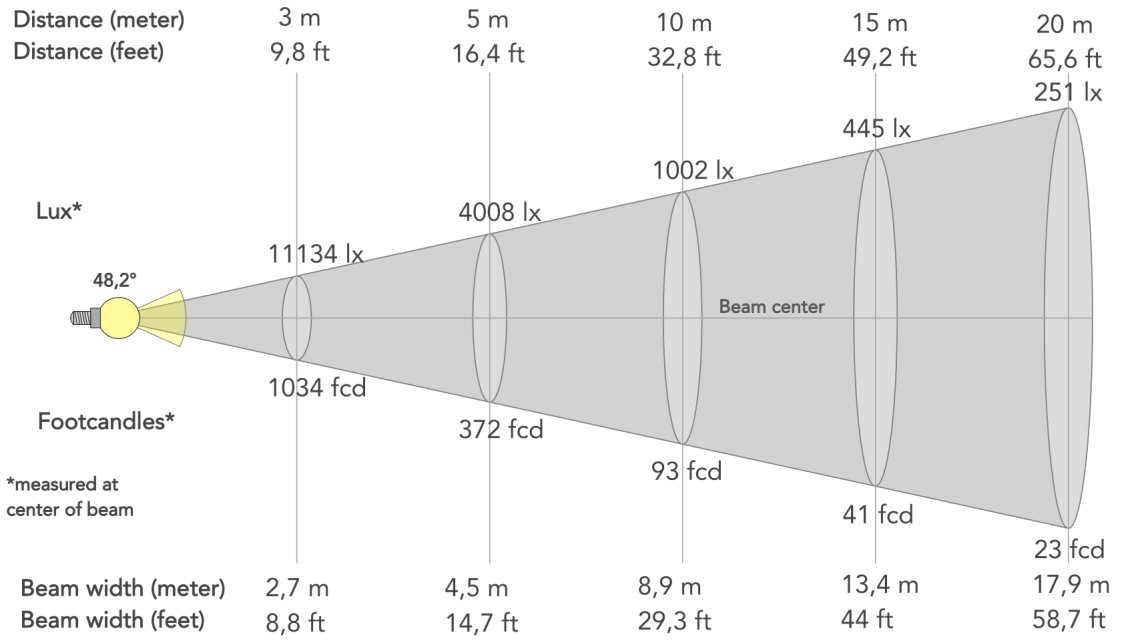

Beam angle (50%): **48.2°**	Field angle (10%): **50.9°**	Cut-off angle (2.5%): **52.2°**