Astra Wash19Pix

ORDER CODE: **ASTRAWASH19PIX**



VERSIONS

	Code	Finishing	RAL
	**ASTRAWASH19PIX**	**Black**	**9004**
	ASTRAWASH19PIXWH	White	9010

SOURCE
19x40W RGBW Osram Ostar LEDs

ZOOM RANGE
4° - 54° motorised linear zoom

IP RATING
IP20

WEIGHT
17,4kg / 38.36lbs

LUMINOUS FLUX (MAX)
5'505 lm

Downloaded on 26/11/2026 - data may be provisional: features, specifications and appearance are subject to change without notice

TECHNICAL SPECIFICATIONS

LIGHT SOURCE

Source:	19x40W RGBW Osram Ostar LEDs
Luminous flux:	(4°) 5'505 lm - (54°) 10'143 @Full
Lux:	Calibration ON: (4°) 45'146 lx - (54°) 1'174lx @5 m full
Lux:	Calibration OFF: (4°) 46'100 lx - (54°) 1'190lx @5 m full
Other:	outer RGB pixel ring with frost film
Source life expectancy:	> 50.000 hrs (L70B10 @Ta 25° C / 77° F)

OPTICS

Zoom range:	4° - 54° motorised linear zoom
Lens type:	honeycomb gapless plano-convex optics
Additional optics:	diffuser on outer pixel ring

COLOUR SYSTEM

CCT:	CCT control, + / - green correction, tungsten emulation
White presets:	2.800 K ~ 10.000K
Colour wheel:	virtual colour wheel with macros

DYNAMIC EFFECTS

Control Resolution:	16-bit dimmer and color control
Pixel patterns:	pre-programmed static and dynamic pixel patterns
FX generator:	adjustable foreground/background colour, index, speed, direction
Special features:	outer RGB, pixel ring with several built in FX macros and linear crossfade channel from any white to any colour; virtual CTO on colours

CONTROL

Supported Protocols:	DMX512, RDM, Art-Net, Klingnet, sACN, W-DMX
DMX channels:	main personality 29 / 32 / 53ch
Pixel control:	OFF, ring and pixel2pixel
RDM:	for remote addressing and parameter configuration
Display:	LCD high resolution colour display with autoflip

MOVEMENT

Pan:	540° - 16-bit resolution
Tilt:	233° - 16-bit resolution
Position feedback:	automatic repositioning after external movement
Pan / tilt lock:	for transport and maintenance

ELECTRONICS

Dimmer:	linear 0 - 100% electronic dimmer
Dimmer curves:	4 selectable dimming modes available
Strobe / shutter:	1 - 30 Hz, electronic
Display battery:	included, self-charging battery backup
Selectable PWM:	600 to 50,000 Hz (selectable steps)
Firmware upgrade with:	via DMX with UPBOXPRO/ UPBOX2 (not included)

CONNECTIONS

Power connection:	Neutrik powerCON TRUE1 IN/OUT connectors
Signal connection:	Amphenol XLR 5p IN/OUT connectors
Wireless Connection:	integrated LumenRadio TiMo FX RDM - CRMX and W-DMX compatible
Data connection:	Neutrik Art-Net RJ45 IN/OUT

ELECTRICAL

Mains power supply:	100-240V - 50/60Hz
Max power consumption (230V):	620W
Output (at 230V):	3 units on a single power line
Standby power:	46.8W
Power factor:	> 0,95

Downloaded on 26/11/2026 - data may be provisional: features, specifications and appearance are subject to change without notice

TECHNICAL SPECIFICATIONS

PHYSICAL

IP rating:	IP20
Cooling:	filtered forced-air with low-noise fan
Housing:	Aluminium structure with high-resistance polycarbonate cover
Finish:	black (RAL 9004) or white (RAL 9010)
Operating temperature:	Ta -10 to +45 °C (+14 to +113 °F)
Dimensions (WxHxD):	410x514x250mm
Weight:	17,4kg

INSTALLATION

Suspension and fixing:	any position with quick-lock Omega brackets
Mounting points:	quick-lock Omega sockets

CERTIFICATIONS / REPORTS

Compliance:	CE, UKCA, RCM, cTUVus, FCC

BOX CONTENT

1 x ASTRAWASH19PIX

2 x OS24PLUS

1 x 1,5 meters 3G1,5mmq power cable (BARE END - NEUTRIK POWERCON TRUE1 IP65 power connector)

ACCESSORIES & RELATED PRODUCTS



OS24PLUS
Quick-lock omega bracket, M12 hole



AETHERBOXONE
IP65 1x universe CRMX transceiver, DMX, Ethernet protocols, Wi-Fi, Bluetooth, battery-ready, POE



ASTRAW19MBCR
Matt black cover for ring for ASTRAWASH19PIX and ASTRAWASH19PIXIP



UPBOXPRO
Firmware uploader kit, USB IN, 5-pin XLR DMX OUT connector



FCLASTRAW19PIX
Flight case for 4 pcs of ASTRAWASH19PIX / JETWASH19



ASTRAW19PEC
Egg Crate for ASTRAWASH19PIX

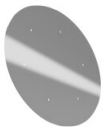

ASTRAW19PSF
Smooth filter for ASTRAWASH19PIX and ASTRAWASH19PIXIP

TECHNICAL DRAWINGS

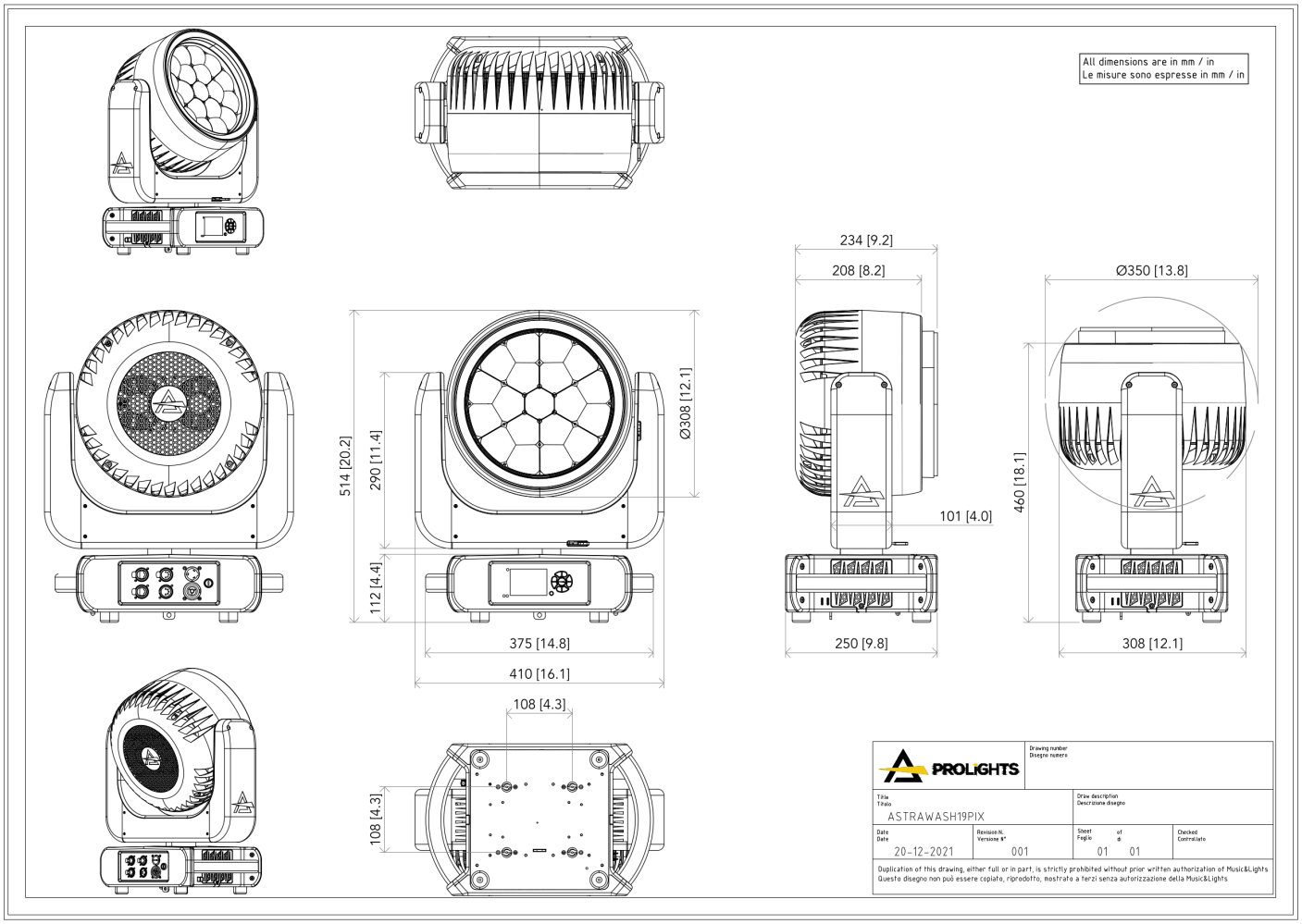

Downloaded on 26/11/2026 - data may be provisional: features, specifications and appearance are subject to change without notice

PHOTOMETRICS

Full On Cal. Off - Min Zoom

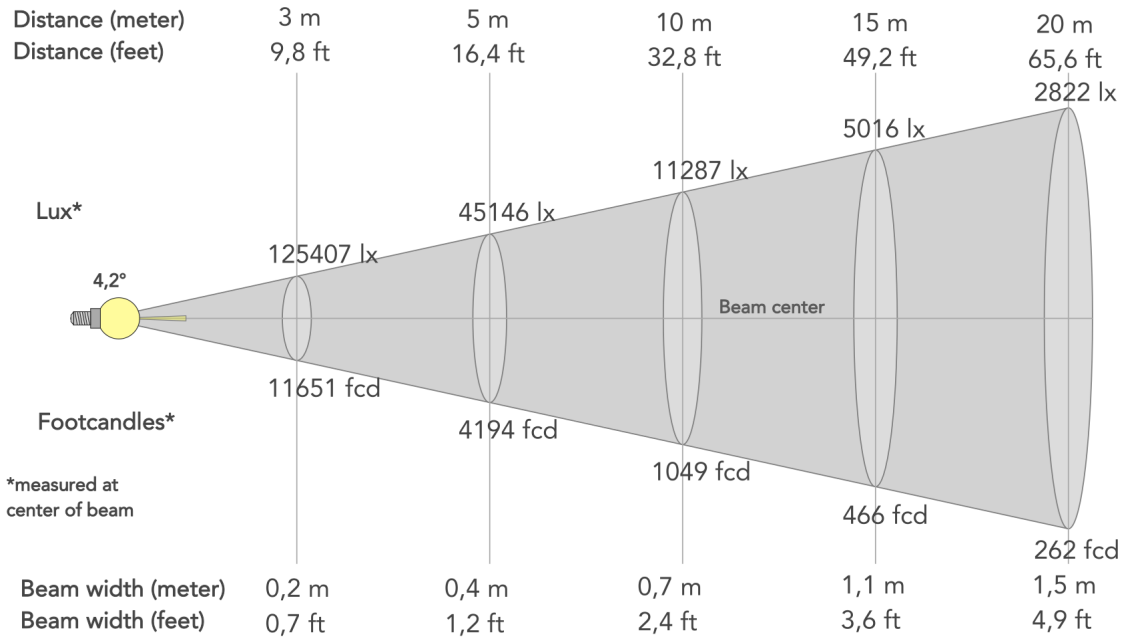

Beam angle (50%): **4.2°**	Field angle (10%): **6.3°**	Cut-off angle (2.5%): **7.1°**

Full On Cal. Off - Max Zoom

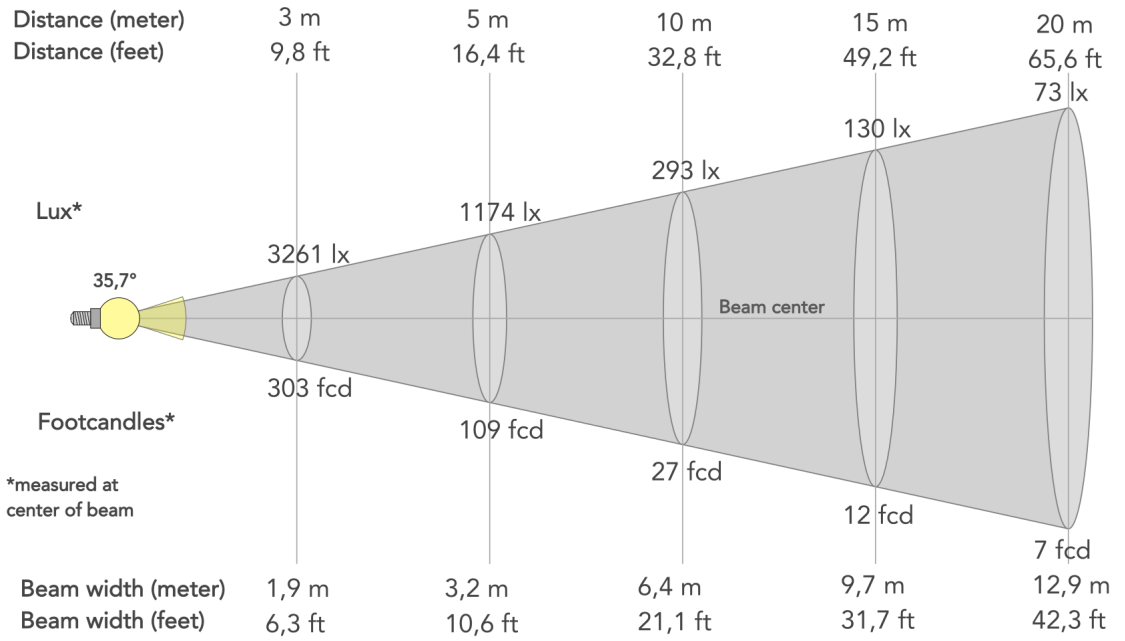

Beam angle (50%): **35.7°**	Field angle (10%): **53.9°**	Cut-off angle (2.5%): **62.2°**