Diamond 19TW

ORDER CODE: DIAMOND19TW



SOURCE	ZOOM RANGE	IP RATING
19x15W Warm White + Cold White Osram Ostar LED	**7° - 40° motorised linear zoom**	**IP20**

WEIGHT	CRI
11kg / 24.25lbs	**97 @2.600 K**

Downloaded on 26/11/2026 - data may be provisional: features, specifications and appearance are subject to change without notice

TECHNICAL SPECIFICATIONS

LIGHT SOURCE

Source:	19x15W Warm White + Cold White Osram Ostar LED
Source CCT:	2.600 K - 8.000K
Luminous flux:	4'810 @Full
Lux:	(6°) 5'859 lx - (40°) 1'089lx @5 m full
CRI:	97 @2.600 K
R9:	87 @2.600 K
TLCI:	94 @2.600 K
TM30 Rf:	93 @2.600 K
TM30 Rg:	102,8 @2.600 K
Source life expectancy:	> 50.000 h

OPTICS

Zoom range:	7° - 40° motorised linear zoom
Lens type:	honeycomb gapless plano-convex optics

COLOUR SYSTEM

CCT:	CCT control through dedicated DMX channel
White presets:	2.600 K ~ 8.000K
Colour wheel:	built-in white presets

CONTROL

Supported Protocols:	DMX512, RDM
DMX channels:	12 / 13 / 14 / 20ch
RDM:	for remote addressing and parameter configuration
Display:	LCD high resolution colour display
Hibernation:	power safe mode when lost DMX
Master/Slave:	for synchronised operation of more units linked in a chain

MOVEMENT

Pan:	630° - 8/16-bit resolution
Tilt:	265° - 8/16-bit resolution
Position feedback:	automatic repositioning after external movement

ELECTRONICS

Dimmer:	linear 0 - 100% electronic dimmer
Strobe / shutter:	1 - 25 Hz, electronic
Display battery:	included, self-charging battery backup
Firmware upgrade with:	via DMX with UPBOXPRO/ UPBOX2 (not included)

CONNECTIONS

Power connection:	Neutrik powerCON IN/OUT connectors
Signal connection:	Amphenol XLR 3p IN/OUT connectors
Wireless Connection:	integrated W-DMX receiver

ELECTRICAL

Mains power supply:	100-240V - 50/60Hz
Max power consumption (230V):	316W
Output (at 230V):	6 units on a single power line
Power factor:	0,90

PHYSICAL

IP rating:	IP20
Cooling:	heat pipe with low-noise fan
Housing:	Aluminium structure with high-resistance polycarbonate cover
Finish:	black
Operating temperature:	Ta -10 to +45 °C (+14 to +113 °F)
Dimensions (WxHxD):	338x449x235mm
Weight:	11kg

Downloaded on 26/11/2026 - data may be provisional: features, specifications and appearance are subject to change without notice

TECHNICAL SPECIFICATIONS

INSTALLATION

Suspension and fixing:	any position with quick-lock Omega brackets

CERTIFICATIONS / REPORTS

Compliance:	CE, UKCA, RCM

BOX CONTENT

1 x DIAMOND19TW

1 x 1,5 meters power cable (BARE END - NEUTRIK POWERCON)

2 x OS24PLUS

ACCESSORIES & RELATED PRODUCTS



OS24PLUS

Quick-lock omega bracket, M12 hole



UPBOXPRO

Firmware uploader kit, USB IN, 5-pin XLR DMX OUT connector

Downloaded on 26/11/2026 - data may be provisional: features, specifications and appearance are subject to change without notice

TECHNICAL DRAWINGS

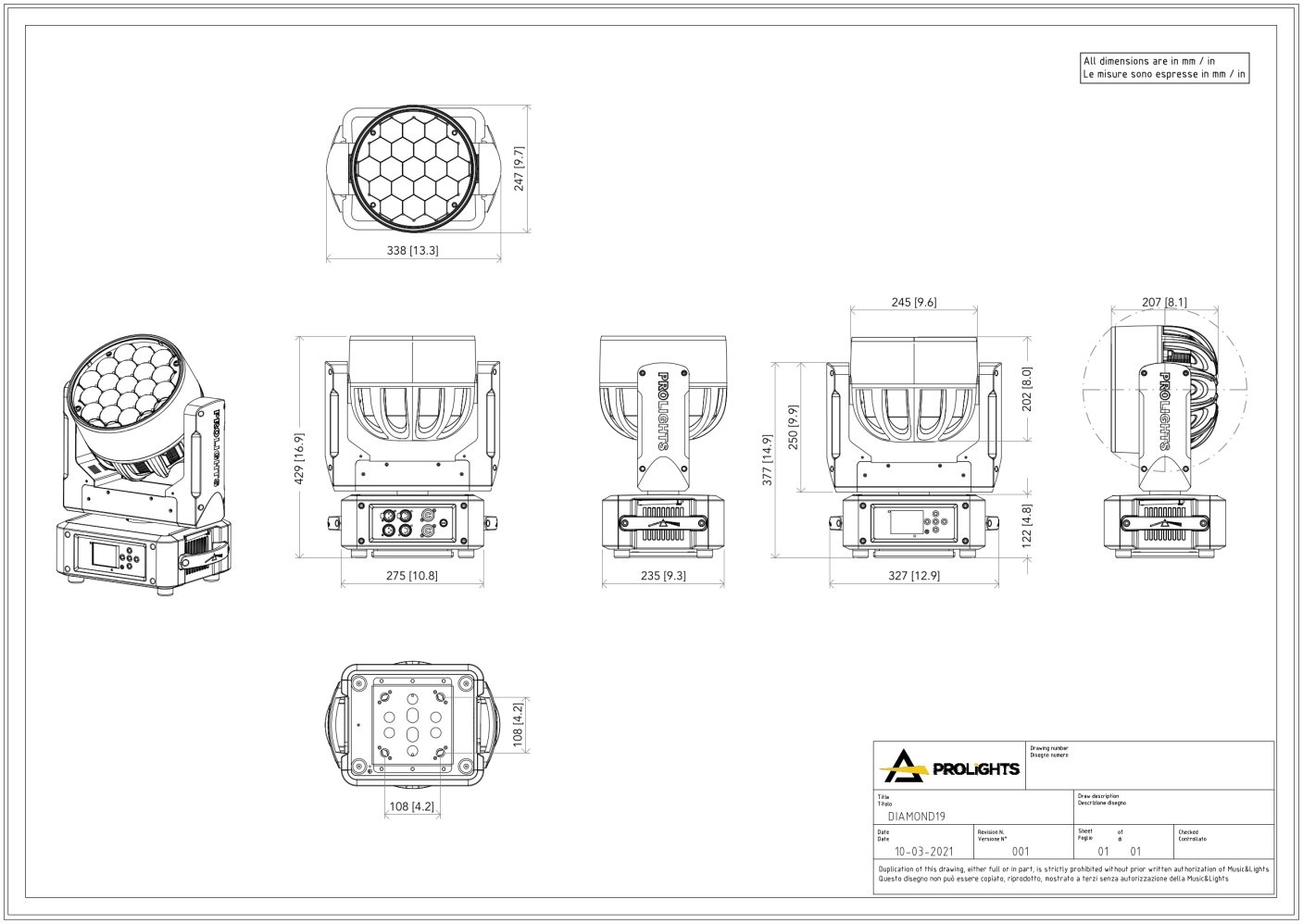

PHOTOMETRICS

Full On - Min Zoom

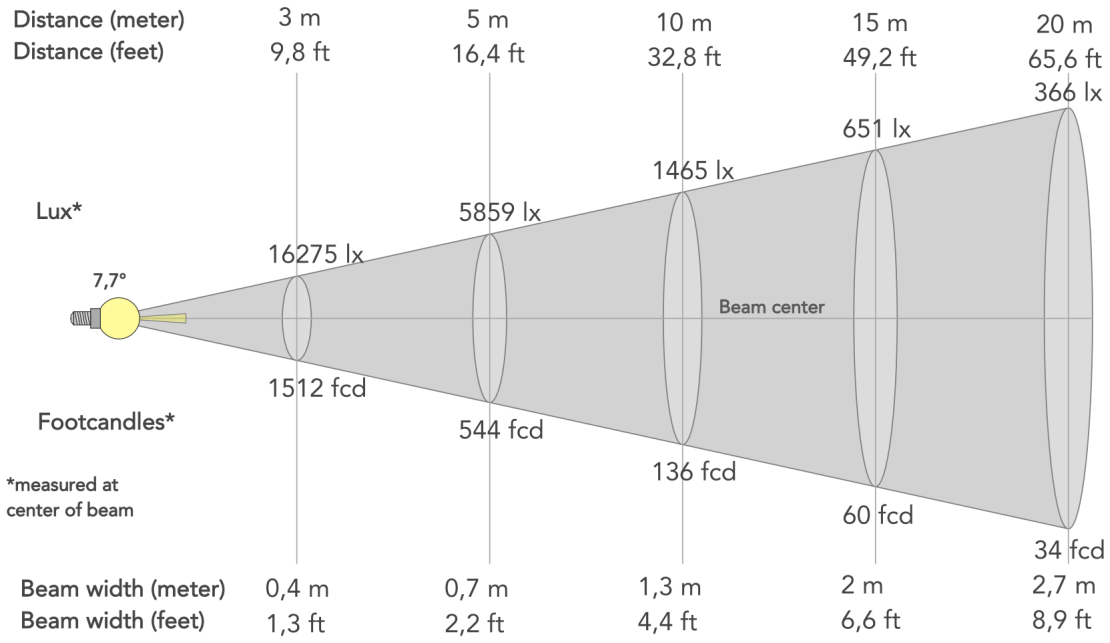

Beam angle (50%): **7.7°**	Field angle (10%): **14.2°**	Cut-off angle (2.5%): **19.2°**

Full On - Max Zoom

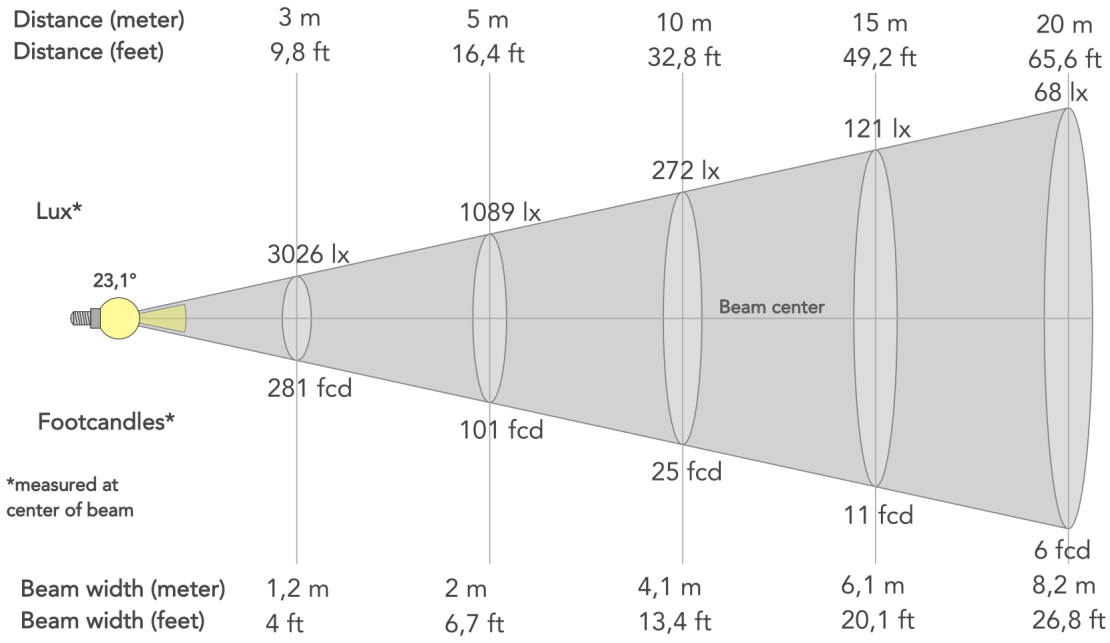

Beam angle (50%): **23.1°**	Field angle (10%): **40.8°**	Cut-off angle (2.5%): **53.8°**

MUSIC & LIGHTS S.r.l. | Via A. Olivetti, snc
04026 - Minturno (LT) ITALY | info@prolights.it
Tel: +39 0771 72190 | **prolights.it**
VAT No. IT 02057590594

Downloaded on 26/11/2026 - data may be provisional: features, specifications and appearance are subject to change without notice