DigiStrip IP100

ORDER CODE: **DIGISTRIPIP100**



SOURCE

100x0,25W RGB LEDs

IP RATING

IP65 for temporary outdoor use

WEIGHT

2,7kg / 5.95lbs

LUMINOUS FLUX (MAX)

542 lm

Downloaded on 26/11/2026 - data may be provisional: features, specifications and appearance are subject to change without notice

TECHNICAL SPECIFICATIONS

LIGHT SOURCE

Source:	100x0,25W RGB LEDs
Luminous flux:	without cover: 542 lm - black cover: 81 lm - flat white cover: 319 lm - dome white cover: 351 @Full
Lux:	without cover: 7 lx - black cover: 1 lx - flat white cover: 3 lx - dome white cover: 2lx @5 m full
Other:	view angle 100° - driver chip MBI 5043
Source life expectancy:	> 50.000 h

OPTICS

Pixel pitch:	10mm
Additional optics:	black cover and white dome cover (included)
Other:	flat white cover (included)

CONNECTIONS

Signal connection:	Seetronic XLR 4p IN/OUT connectors

CONTROL

Supported Protocols:	Art-Net, sACN, Kling-Net
Control units:	20 pcs power & signal under 1 pc DIGIDRIVERIP
Art-Net channels:	300ch
Pixel control:	pixel2pixel control

ELECTRICAL

Mains power supply:	DC 48V
Max power consumption (230V):	25W

CERTIFICATIONS / REPORTS

Compliance:	CE, UKCA

PHYSICAL

IP rating:	IP65 for temporary outdoor use
Housing:	Sturdy aluminium profile
Finish:	black
Dimensions (WxHxD):	1000x36x128mm
Weight:	2,7kg

INSTALLATION

Suspension and fixing:	- bracket for truss rigging and hardware for connection of more units
Hardware on-board:	on board mechanics for modular assembly of multiple fixtures

BOX CONTENT

1 x DIGISTRIPIP100

1 x flat black cover

1 x white dome cover

ACCESSORIES & RELATED PRODUCTS



DIGIDRIVERIP

Master driver for Digi IP series, Art-Net, Kling-Net, IP65, 550W,

DIGILINKIP

Digi IP series signal 4-pin cable

TECHNICAL DRAWINGS

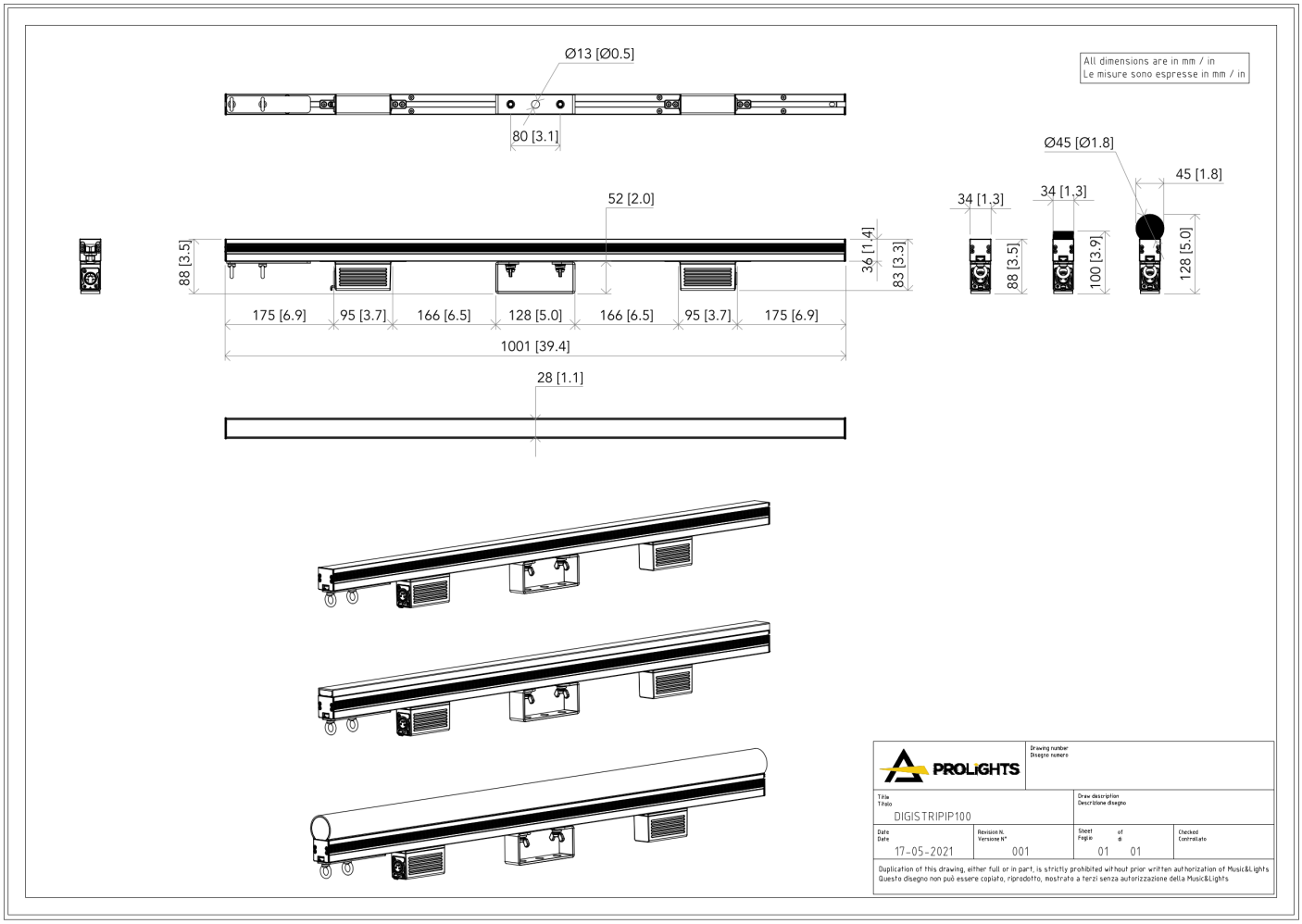

PHOTOMETRICS

Full On - No Diffuser

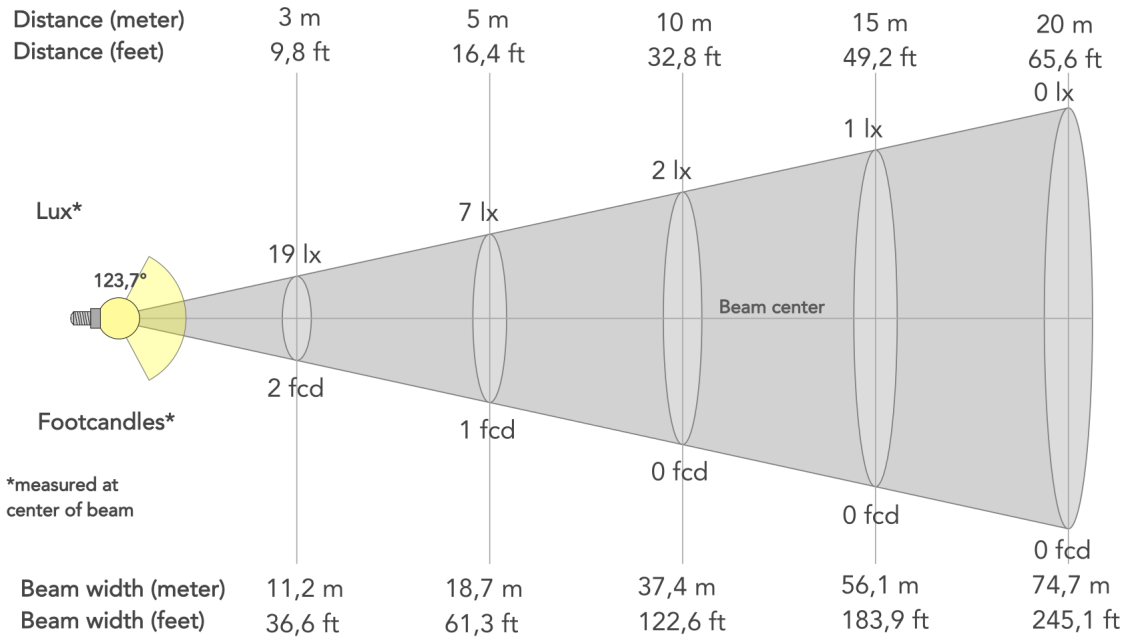

Beam angle (50%): **123.7°**	Field angle (10%): **156.8°**	Cut-off angle (2.5%): **163.8°**

MUSIC & LIGHTS S.r.l. | Via A. Olivetti, snc
04026 - Minturno (LT) ITALY | info@prolights.it
Tel: +39 0771 72190 | **prolights.it**
VAT No. IT 02057590594

Downloaded on 26/11/2026 - data may be provisional: features, specifications and appearance are subject to change without notice