EclDisplay Barndoor+Frame

ORDER CODE: ECLDISPBDNFFB

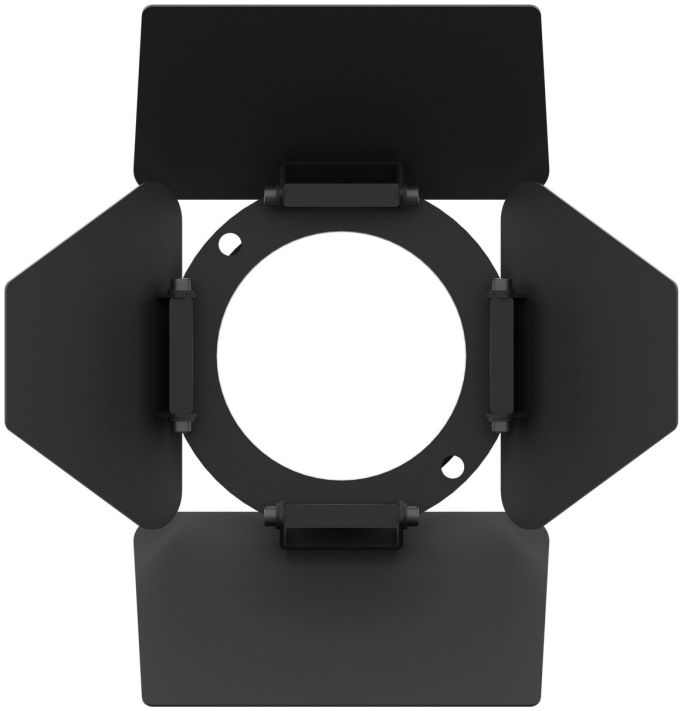

VERSIONS

	Code	Finishing
	**ECLDISPBDNFFB**	**Black**
	ECLDISPBDNFFW	White Out / Black Inside

ACCESSORIES & RELATED PRODUCTS



ECLDISPFILT01L
Light 1° frost filters for ECLDISPLAY and ECLMINI series, 87 mm diameter



ECLDISPFILT10H
Heavy 10° frost filter for ECLDISPLAY and ECLMINI series, 87 mm diameter



ECLDISPFILT03M
Medium 3° frost filter for ECLDISPLAY and ECLMINI series, 87 mm diameter

TECHNICAL DRAWINGS

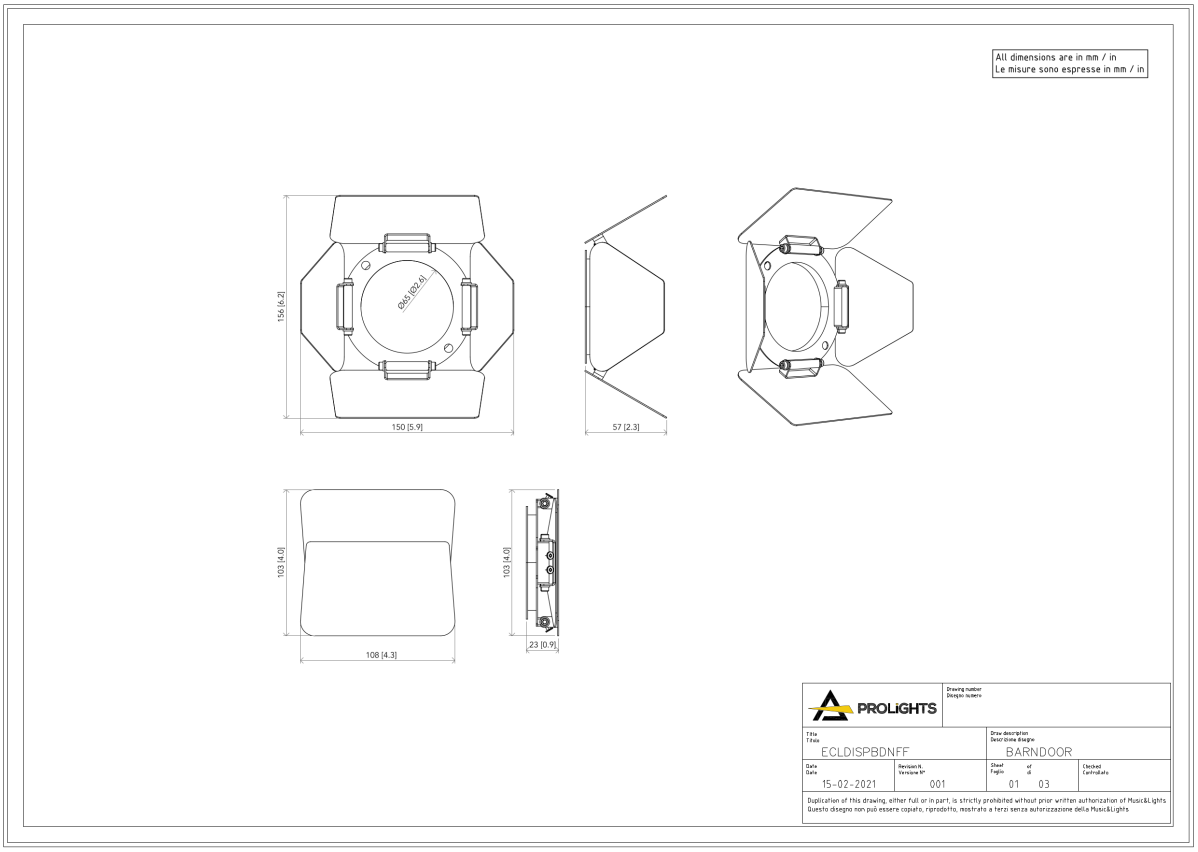

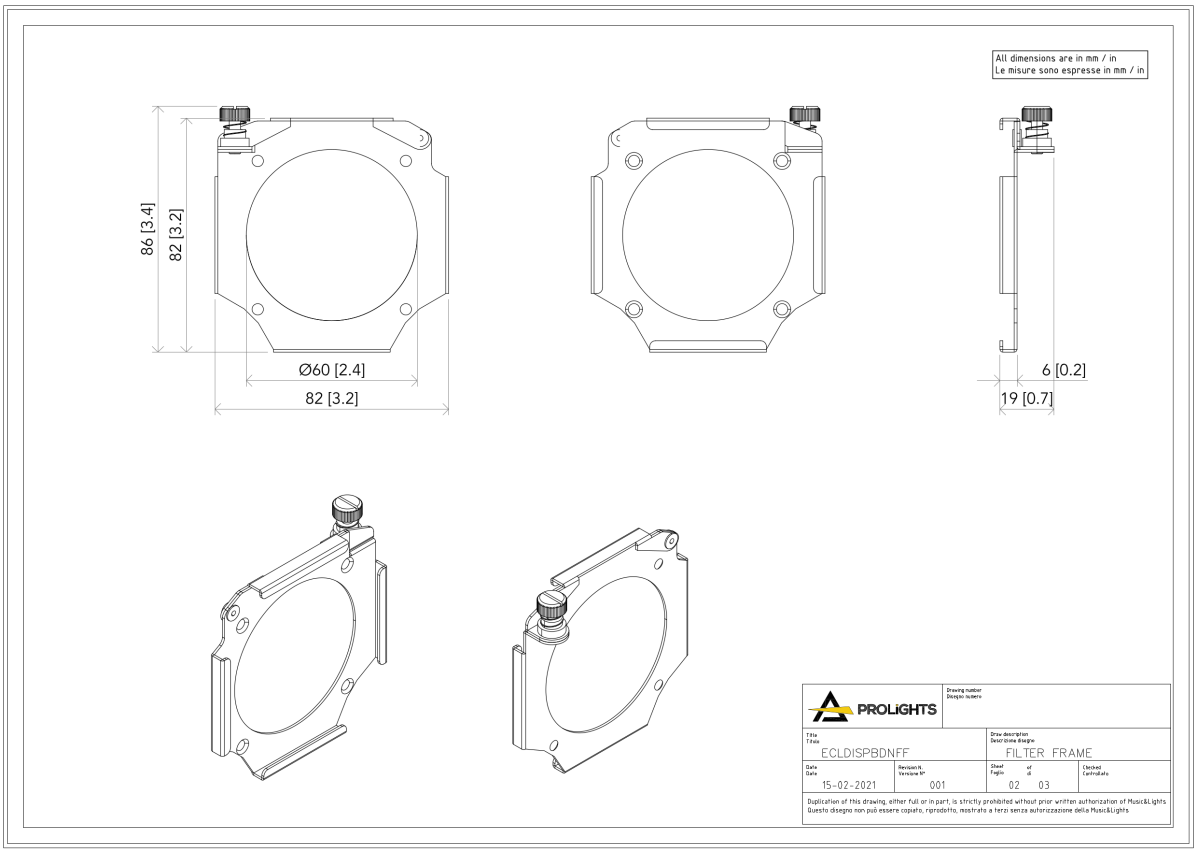

Downloaded on 27/11/2026 - data may be provisional: features, specifications and appearance are subject to change without notice

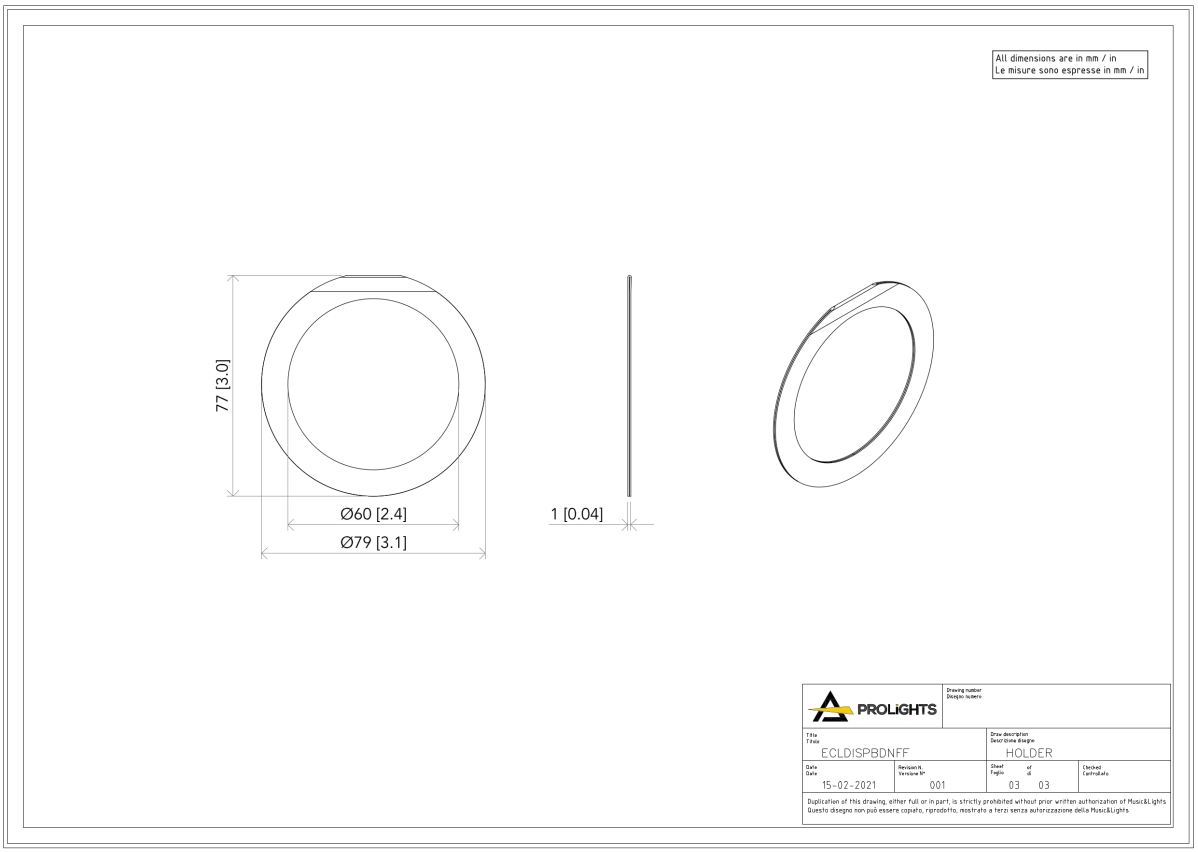
All dimensions are in mm / in
Le misure sono espresse in mm / in
77 [3.0]
Ø60 [2.4]
Ø79 [3.1]
1 [0.04]
PROLIGHTS
ECLDISPBDNFF
HOLDER
15-02-2021
001
03 03
Duplication of this drawing, either full or in part, is strictly prohibited without prior written authorization of Music&Lights
Questo disegno non può essere copiato, riprodotto, mostrato a terzi senza autorizzazione della Music&Lights