EclExpo Flood150IPFC

ORDER CODE: ECLEXPOFL150IPFCB



SOURCE
150W RGB + Warm White LED

IP RATING
IP65 for temporary outdoor use

WEIGHT
4,2kg / 9.26lbs

CRI
91,6 @5'600K

Downloaded on 26/11/2026 - data may be provisional: features, specifications and appearance are subject to change without notice

TECHNICAL SPECIFICATIONS

LIGHT SOURCE

Source:	150W RGB + Warm White LED
Luminous flux:	5'235 @3.200 K
Luminous flux:	6'210 @5.600 K
Lux:	69lx @5 m 3.200 K
Lux:	83lx @5 m 5.600K
CRI:	91,6 @5'600K
R9:	96,9 @5'600K
TLCI:	90 @5'600K
TM30 Rf:	89,3 @5'600K
TM30 Rg:	106,2 @5'600K
Source life expectancy:	> 30.000 hrs (L70B10 @Ta 25° C / 77° F)

OPTICS

Optics:	asymmetrical beam reflector in pure aluminium 99,6%
Beam angle:	(H) 100° x (V) 60°
Additional optics:	5° smooth filter on-board

COLOUR SYSTEM

CCT:	CCT control, + / - green correction, tungsten emulation
White presets:	2.800 K - 10.000K
Colour wheel:	built-in white presets

DYNAMIC EFFECTS

Control Resolution:	16-bit dimmer control
Static mode:	selection of static dimmer, colors and color temperature
Manual mode:	manual adjustment of intensity, CT, colour correction from knob
Auto mode:	built-in programs with execution speed adjustment

CONTROL

Supported Protocols:	DMX512, RDM, CRMX
DMX channels:	1 / 2 / 5 / 9 / 10 / 12 / 18ch
RDM:	for remote addressing and parameter configuration
Display:	Graphic User Interface
Stand Alone:	2 rotatory knobs
Master/Slave:	for synchronised operation of more units linked in a chain

ELECTRONICS

Dimmer:	linear 0 - 100% electronic dimmer
Dimmer curves:	4 selectable dimming modes available
Strobe / shutter:	1 - 30 Hz, electronic
Selectable PWM:	600 to 40,000 Hz (selectable steps)
Firmware upgrade with:	via DMX with UPBOXPRO/ UPBOX1 (not included)

CONNECTIONS

Power connection:	Seetronic powerCON TRUE IP65 IN/OUT
Signal connection:	IP65 Seetronic XLR 5p IN/OUT connectors
Wireless Connection:	integrated LumenRadio TiMo FX RDM - CRMX and W-DMX compatible

ELECTRICAL

Mains power supply:	100-240V - 50/60Hz
Max power consumption (230V):	175W
Output (at 230V):	7 units on a single power line
Standby power:	1,9 W
Power factor:	> 0,94

PHYSICAL

IP rating:	IP65 for temporary outdoor use
Cooling:	forced-air with low-noise fan
Housing:	Sturdy die-cast magnesium body
Finish:	black (RAL 9004)
Operating temperature:	Ta -20 to +45 °C (-4 to +113 °F)
Dimensions (WxHxD):	283x273x176mm
Weight:	4,2kg

Downloaded on 26/11/2026 - data may be provisional: features, specifications and appearance are subject to change without notice

TECHNICAL SPECIFICATIONS

INSTALLATION

Suspension and fixing:	bracket for hanging and floor positioning
Other:	see available accessories

CERTIFICATIONS / REPORTS

Compliance:	CE, RCM, FCC, cTUVus

BOX CONTENT

1 x ECLEXPOFL150IPFC

1 x 1,5 meters 3G1,5mmq power cable (BARE END - SEETRONIC POWERCON TRUE1 IP65 power connector)

ACCESSORIES & RELATED PRODUCTS



FCLEXPOFL150IP

Flight case for 6 pcs of ECLEXPOFL150IP series



ECLEXPOFL150BDBK

Barn door 8 directional flaps to adjust the light beam for ECLEXPOFL150, black



ECLEXPOFL150FFBK

Filter frame for ECLEXPOFL150, black



AETHERBOXONE

IP65 1x universe CRMX transceiver, DMX, Ethernet protocols, Wi-Fi, Bluetooth, battery-ready, POE



UPBOXPRO

Firmware uploader kit, USB IN, 5-pin XLR DMX OUT connector

TECHNICAL DRAWINGS

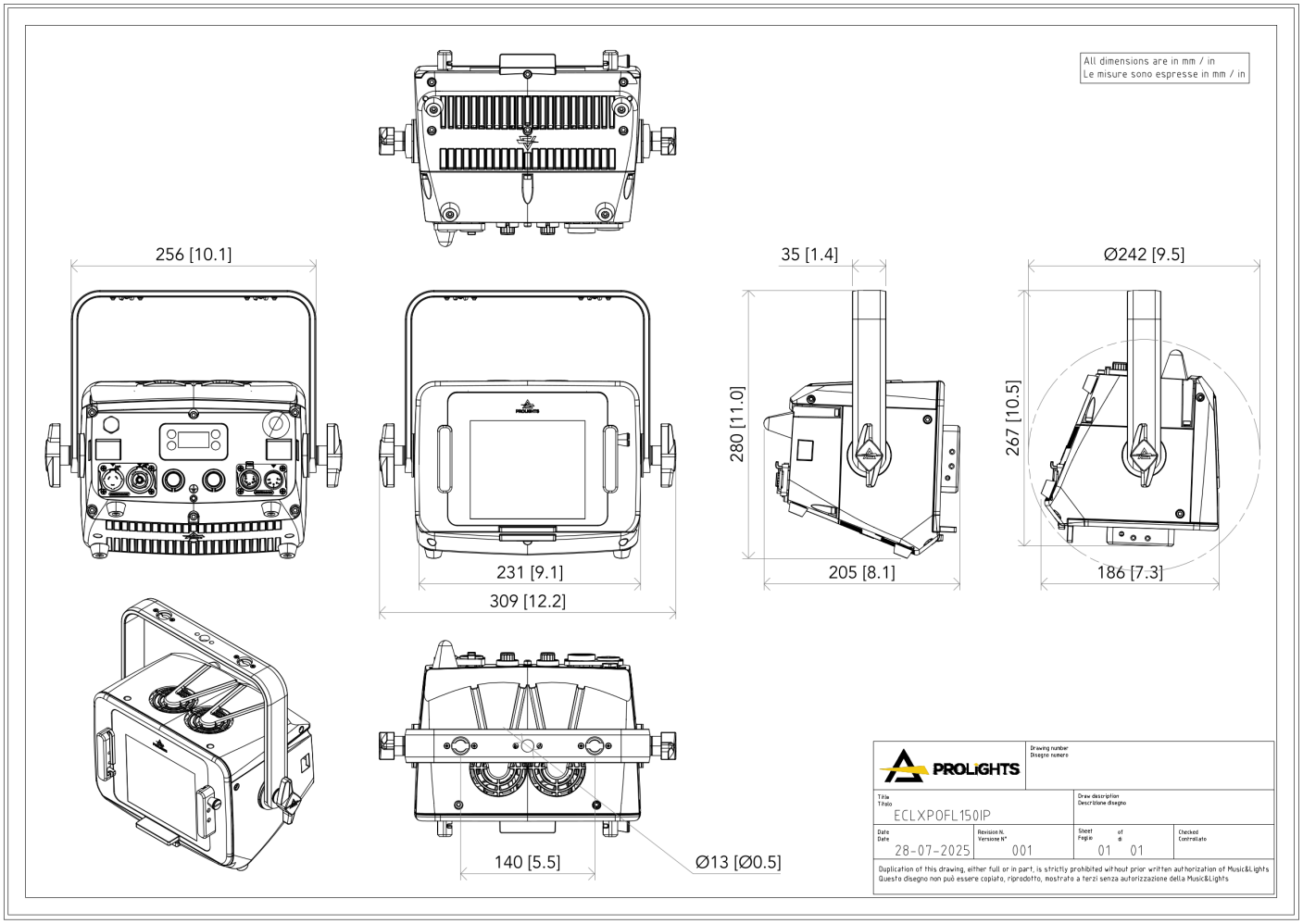

Downloaded on 26/11/2026 - data may be provisional: features, specifications and appearance are subject to change without notice

PHOTOMETRICS

Full On HB - Original Optic

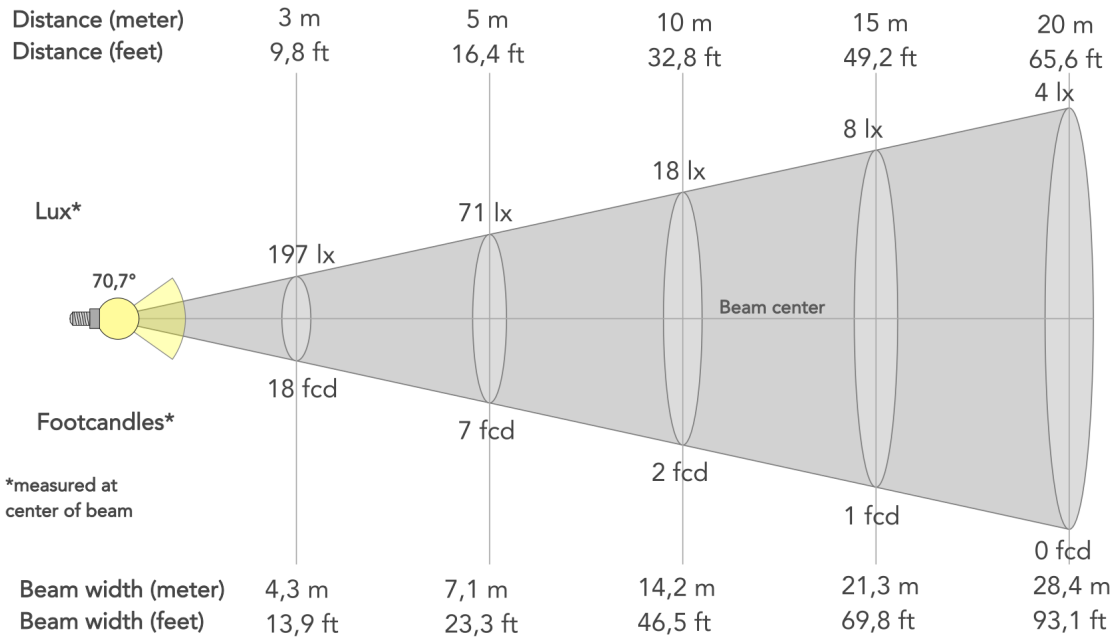

Beam angle (50%): **70.7°**	Field angle (10%): **131°**	Cut-off angle (2.5%): **154.6°**