EclFresnel CT+MIP

ORDER CODE: ECLFRCTPMIPBK



SOURCE	ZOOM RANGE	IP RATING
350W 6 colour LEDs source	**9,4° - 80,8° manual**	**IP65 for temporary outdoor use (*)**

WEIGHT	LUMINOUS FLUX (MAX)	CRI
10,9kg / 24.03lbs	**3'867 lm**	**97 @3.200K**

Downloaded on 27/11/2026 - data may be provisional: features, specifications and appearance are subject to change without notice

TECHNICAL SPECIFICATIONS

LIGHT SOURCE

Source:	350W 6 colour LEDs source
Luminous flux:	(9,4°) 3'867 lm - (80,8°) 9'827 @4.000 K
Lux:	(9,4°) 5'706 lx - (80,8°) 451lx @5m 4.000 K
CRI:	97 @3.200K; 96,8 @5.600 K
R9:	91,7 @3.200K; 96,9 @5.600 K
TLCI:	88 @3200K; 94 @5.600 K
TM30 Rf:	> 94 @3.200K; > 94 @5.600 K
TM30 Rg:	< 102 @3.200K; < 103 @5.600 K
Source life expectancy:	> 50.000 h

OPTICS

Zoom range:	9,4° - 80,8° manual
Lens diameter:	200mm
Lens type:	AR-coated glass Fresnel lens providing a classic soft light fall-off
Additional optics:	PC lens available as accessory
Other:	spigot, barndoor and gel frame included

COLOUR SYSTEM

Colour control:	XY, CCT, Gel with Source Emulation, Tungsten emulation, HSI, User preset
CCT:	linear CCT adjustment from 1.850 K-20.000K

CONTROL

Supported Protocols:	DMX512, RDM, CRMX
RDM:	for remote addressing and parameter configuration
Display:	2.8'' Color display
Stand Alone:	4 pushable RGB backlit encoder
Master/Slave:	for synchronised operation of more units linked in a chain

ELECTRONICS

Dimmer:	linear 0 - 100% electronic dimmer
Dimmer curves:	6 selectable dimming modes available
Strobe / shutter:	1 - 30 Hz, electronic
Selectable PWM:	1,282 to 40,000 Hz (selectable steps)
Firmware upgrade with:	via DMX with UPBOXPRO (not included)

CONNECTIONS

Power connection:	Seetronic powerCON TRUE IP65 IN/OUT
Signal connection:	IP65 Seetronic XLR 5p IN/OUT connectors
Wireless Connection:	integrated LumenRadio TiMoTwo - CRMX, CRMX² (RX only) and W-DMX compatible
Data connection:	IP65 WEIPU SF12 4P-F
Low Voltage DC connector:	XLR 3p for 48V

ELECTRICAL

Mains power supply:	100-240V - 50/60Hz
Low Voltage DC mains:	48V
Max power consumption (230V):	350W
Output (at 230V):	9 units on a single power line
Power factor:	> 0,94

PHYSICAL

IP rating:	IP65 for temporary outdoor use (*)
Cooling:	heat pipe with low-noise fan
Housing:	Weatherproof IP65 construction with die-cast magnesium alloy
Finish:	black (RAL 9004)
Operating temperature:	Ta -20 to +45 °C (-4 to +113 °F)
Dimensions (WxHxD):	338x573x428mm
Weight:	10,9kg

Downloaded on 27/11/2026 - data may be provisional: features, specifications and appearance are subject to change without notice

TECHNICAL SPECIFICATIONS

INSTALLATION

Bracket system:	Sliding bracket for adjustable weight balance
Hardware on-board:	filter frame, 8-leaf barndoor and spigot
Other:	strengthened zoom movement system for enhanced durability and stability

CERTIFICATIONS / REPORTS

Compliance:	CE, RCM, FCC, cTUVus

(*)

NOTE:	Suitable for permanent outdoor use, provided that installation and periodic maintenance are carried out by qualified technicians.

BOX CONTENT

1 x ECLFRCTPMIP

1 x ECLFRSPG

1 x ECLFRCTPMFF

1 x ECLFRCTPMBD

1 x 1,5 meters 3G1,5mmq power cable (BARE END - SEETRONIC POWERCON TRUE1 IP65 power connector)

ACCESSORIES & RELATED PRODUCTS



ECLFRCTPLAHK
Longer accessory holder kit for ECLFRCTP series



ECLFRCTPMPCLK
PC lens kit for ECLFRCTPM series



ECLFRCTPM10PADPBK
250mm-10'' frontal adapter for ECLFRCTPM series, black



FCLECLFRCTPM
Flight case for 4 pcs of ECLFRCTPM / MIP series



ECLFRCTPMBAG1U
Empty ABS case for 1 pc of ECLFRCTPM / MIP series



ECLFRCTPMKPOYO
Pole operated aluminium yoke bracket and zoom kit for ECLFRCTPM series



ECLFRSPG
Spigot for PROLIGHTS fixtures



ECLFRCTPMFFBK
Filter frame for ECLFRCTPSM series, black



ECLFRCTPMBDBK
Barn door 8 directional flaps to adjust the light beam for ECLFRCTPM, black



UPBOXPRO
Firmware uploader kit, USB IN, 5-pin XLR DMX OUT connector

Downloaded on 27/11/2026 - data may be provisional: features, specifications and appearance are subject to change without notice

TECHNICAL DRAWINGS

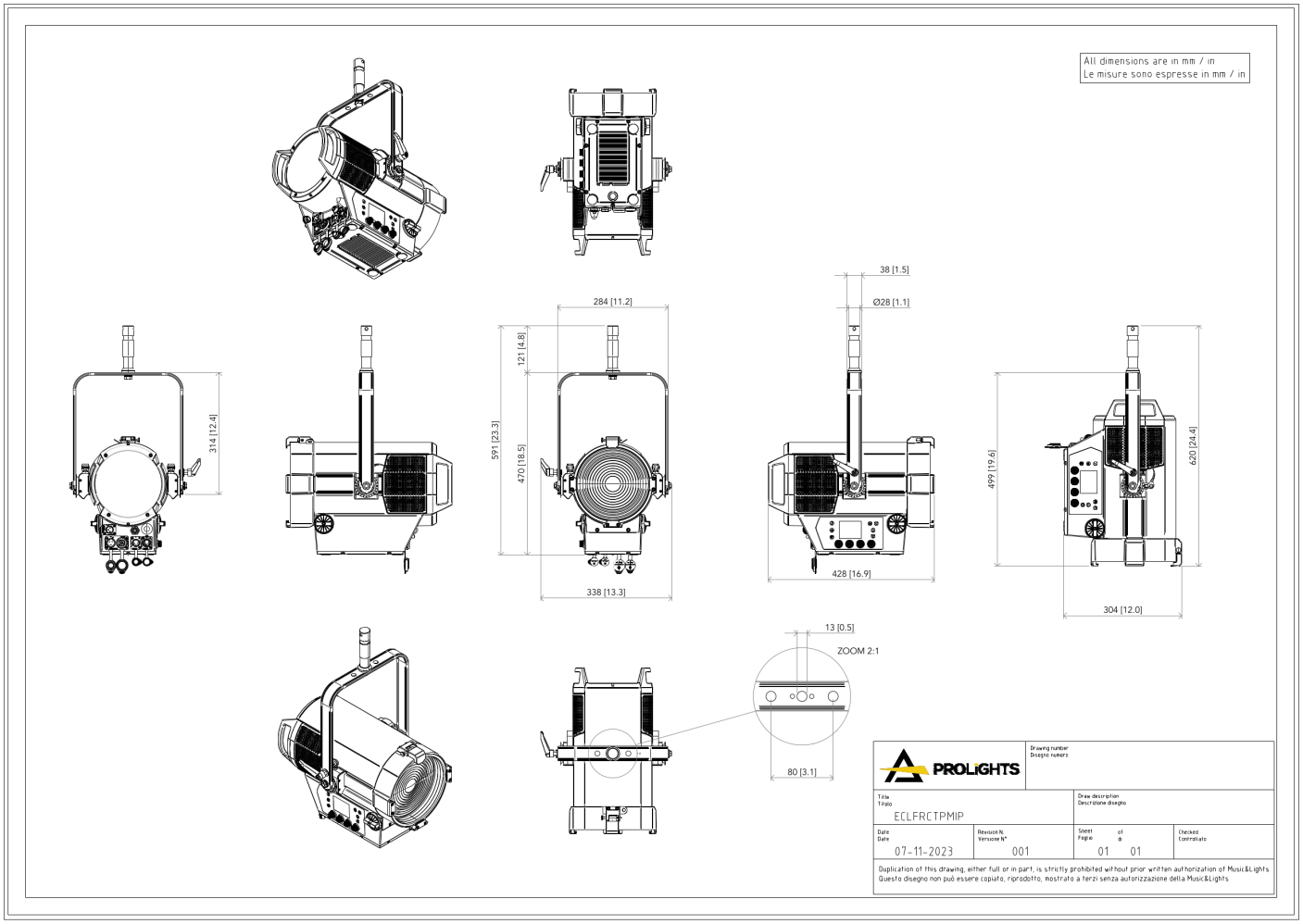

PHOTOMETRICS

Full On - Min Zoom

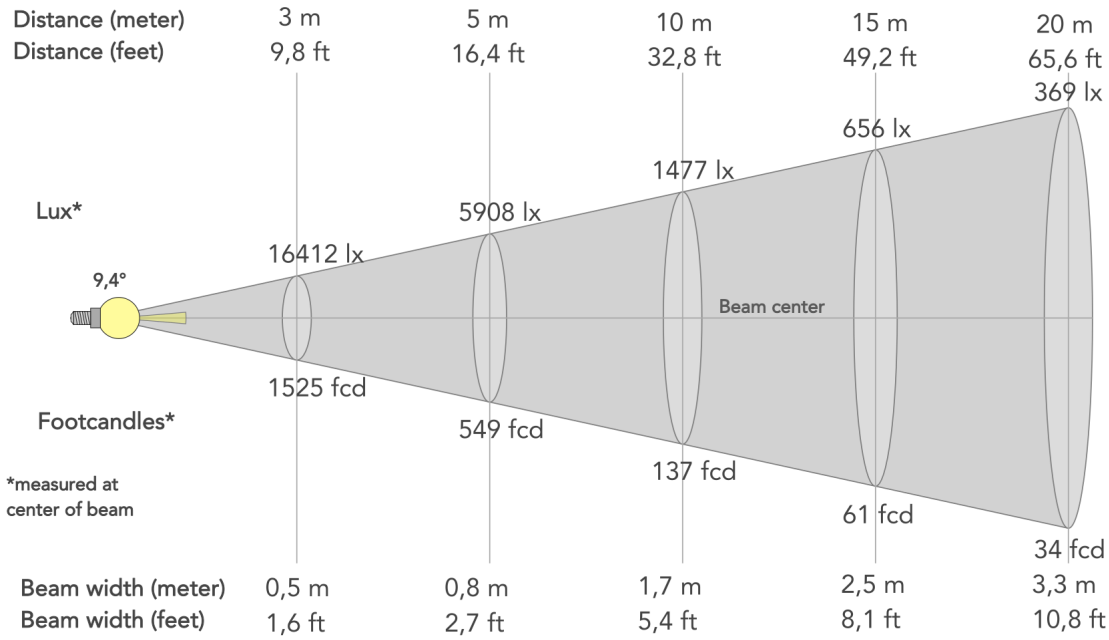

Beam angle (50%): **9.4°**	Field angle (10%): **15.3°**	Cut-off angle (2.5%): **20°**

Full On - Max Zoom

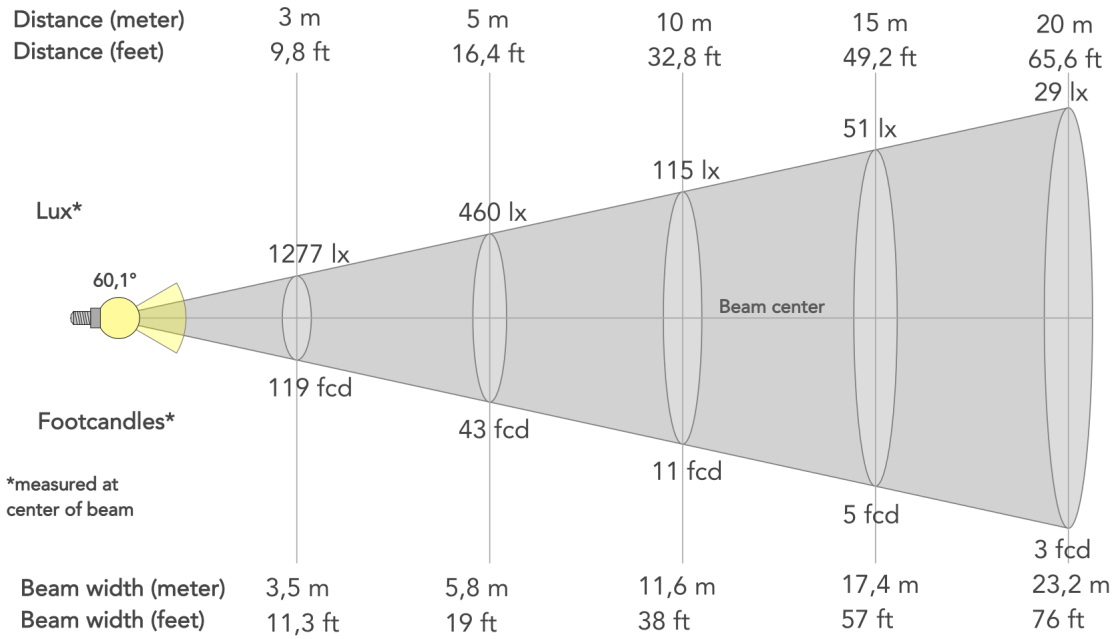

Beam angle (50%): **60.1°**	Field angle (10%): **80.8°**	Cut-off angle (2.5%): **88.4°**

MUSIC & LIGHTS S.r.l. | Via A. Olivetti, snc
04026 - Minturno (LT) ITALY | info@prolights.it
Tel: +39 0771 72190 | **prolights.it**
VAT No. IT 02057590594

Downloaded on 27/11/2026 - data may be provisional: features, specifications and appearance are subject to change without notice