EclProfile FWIPVW

ORDER CODE: **ECLFWIPVWBK**



SOURCE
91x3W Variable White LED

IP RATING
IP65 for temporary outdoor use

WEIGHT
10kg / 22.05lbs

LUMINOUS FLUX (MAX)
4'406 lm

CRI
(only TU) 97,7

TECHNICAL SPECIFICATIONS

LIGHT SOURCE

Source:	91x3W Variable White LED
Source CCT:	from 2.700K to 6.500K
Luminous flux:	(26° only TU) 3'696 lm; (26° only DY) 4'406 lm; (26°) 7'951 @Full
Lux:	(26° only TU) 1'289 lx; (26° only DY) 1'524 lx; (26°) 2'759lx @5 m full
CRI:	(only TU) 97,7; (only DY) 95,7; (@full) 96.3
R9:	(only TU) 86,2; (only DY) 90,9; (@full) 90,5
TLCI:	(only TU) 97; (only DY) 97; (@full) 98
TM30 Rf:	(only TU) >92; (only DY) >90; (@full) >92
TM30 Rg:	(only TU) >96; (only DY) >99; (@full) <102
Source life expectancy:	> 50.000 h

OPTICS

Beam angle:	optional 5° / 10° / 14° / 19° / 26° / 36° / 50° / 70° / 90° zoom 15°-30° / zoom 25°-50°°
Lens type:	HD anti-reflection lenses with achromatic coating
Focus:	manual
Other:	see available accessories

COLOUR SYSTEM

White presets:	2.700K - 5.600K

DYNAMIC EFFECTS

Static mode:	selection of static dimmer
Manual mode:	manual adjustment of dimmer and strobe
Auto mode:	built-in programs with execution speed adjustment
Special features:	HIGH mode, AUTO mode and SILENT mode fan management

GOBOS

Gobo wheel 1:	optional, see available accessories
Gobo size:	(B size) 86 mm outer / 64.5 mm image / 1.1 mm thickness

CONTROL

Supported Protocols:	DMX512, RDM
DMX channels:	2 / 3 / 4 / 6 / 12ch
RDM:	for remote addressing and parameter configuration
Display:	Graphic User Interface
Master/Slave:	for synchronised operation of more units linked in a chain

ELECTRONICS

Dimmer:	linear 0 - 100% electronic dimmer
Strobe / shutter:	1 - 25 Hz, electronic
Selectable PWM:	600 to 25,000 Hz (selectable steps)
Firmware upgrade with:	via DMX with UPBOXPRO/ UPBOX2 (not included)

CONNECTIONS

Power connection:	Seetronic powerCON TRUE IP65 IN/OUT
Signal connection:	Seetronic XLR 5p IN/OUT connectors

ELECTRICAL

Mains power supply:	100-240V - 50/60Hz
Max power consumption (230V):	264W
Output (at 230V):	12 units on a single power line
Power factor:	0,97

Downloaded on 29/11/2026 - data may be provisional: features, specifications and appearance are subject to change without notice

TECHNICAL SPECIFICATIONS

PHYSICAL

IP rating:	IP65 for temporary outdoor use
Cooling:	low-noise fan
Housing:	Sturdy die-cast aluminium body
Finish:	black
Operating temperature:	Ta -10 to +45 °C (+14 to +113 °F)
Dimensions (WxHxD):	324x540x660mm
Weight:	10kg

BOX CONTENT

1 x ECLFWIPVW

1 x 1,5 meters 3G1,5mmq power cable (BARE END - SEETRONIC POWERCON TRUE1 IP65 power connector)

INSTALLATION

Suspension and fixing:	bracket for hanging and floor positioning

CERTIFICATIONS / REPORTS

Compliance:	CE, RCM

Downloaded on 29/11/2026 - data may be provisional: features, specifications and appearance are subject to change without notice

ACCESSORIES & RELATED PRODUCTS



ECLPRIPROTGOBO1BK
Rotating gobo assembly for ECL Profile fixtures, black



FCLECLPRIP
Flightcase to contain 6 pcs ECLFWIP / ECLCTPLUS with lenses 19°, 26°, 36°, 50°



FCLECLPRLZ
Flightcase to contain 8 ECLPRLZ zoom lenses



ECLPRPOYO
Pole operated yoke for ECL Profile fixtures



ECLPRHSNOOTBK
Half Snoot for ECL Profile series, comp. with 19°, 26° and 36° lenses, black



ECLPRFSNOOTBK
Full Snoot for ECL Profile series, comp. with 19°, 26° and 36° lenses, black



ECLLB05BK
5° lens barrel for Ecl Profile fixtures, filterframe included, black housing



ECLPRL05BK
5° PRL lens barrel for EclProfile fixtures, black housing



ECLPRL10BK
10° PRL lens barrel for EclProfile fixtures, black housing



ECLPRL14BK
14° PRL lens barrel for EclProfile fixtures, black housing



ECLPRL19BK
19° PRL lens barrel for EclProfile fixtures, black housing



ECLPRL26BK
26° PRL lens barrel for EclProfile fixtures, black housing



ECLPRL36BK
36° PRL lens barrel for EclProfile fixtures, black housing



ECLPRL50BK
50° PRL lens barrel for EclProfile fixtures, black housing



ECLPRL70BK
70° PRL lens barrel for EclProfile fixtures, black housing



ECLPRL90BK
90° PRL lens barrel for EclProfile fixtures, black housing



ECLPRLZ1530BK
Zoom 15°-30° PRL lens barrel for EclProfile fixtures, black housing



ECLPRLZ2550BK
Zoom 25°-50° PRL lens barrel for EclProfile fixtures, black housing



ECLPRGH
Gobo holder for ECL Profile fixtures, B size



ECLPRGHA
Gobo holder for ECL Profile fixtures, A size



ECLPRIRIS
Iris accessory for ECL Profile fixtures



ECLPRSEF1
Soft edge filter and holder kit for ECL Profile fixtures



ECLLZLLKA
Hexagonal head screw, to adapt ECLLZ lenses on ECLCTPLUS / IP, ECLFW / IP and ECLFS



IPTESTBOX
Portable vacuum and pressure tester for ProLights IP fixtures



UPBOXPRO
Firmware uploader kit, USB IN, 5-pin XLR DMX OUT connector

TECHNICAL DRAWINGS

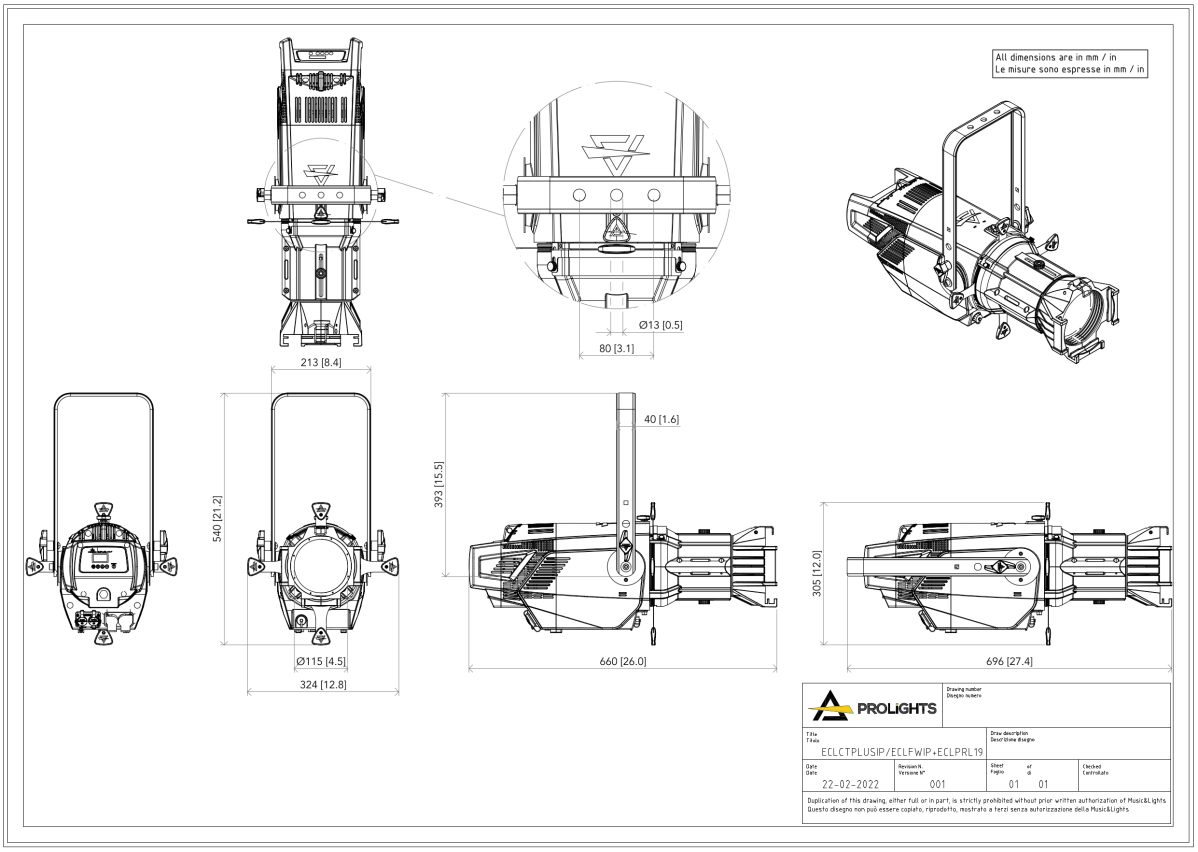

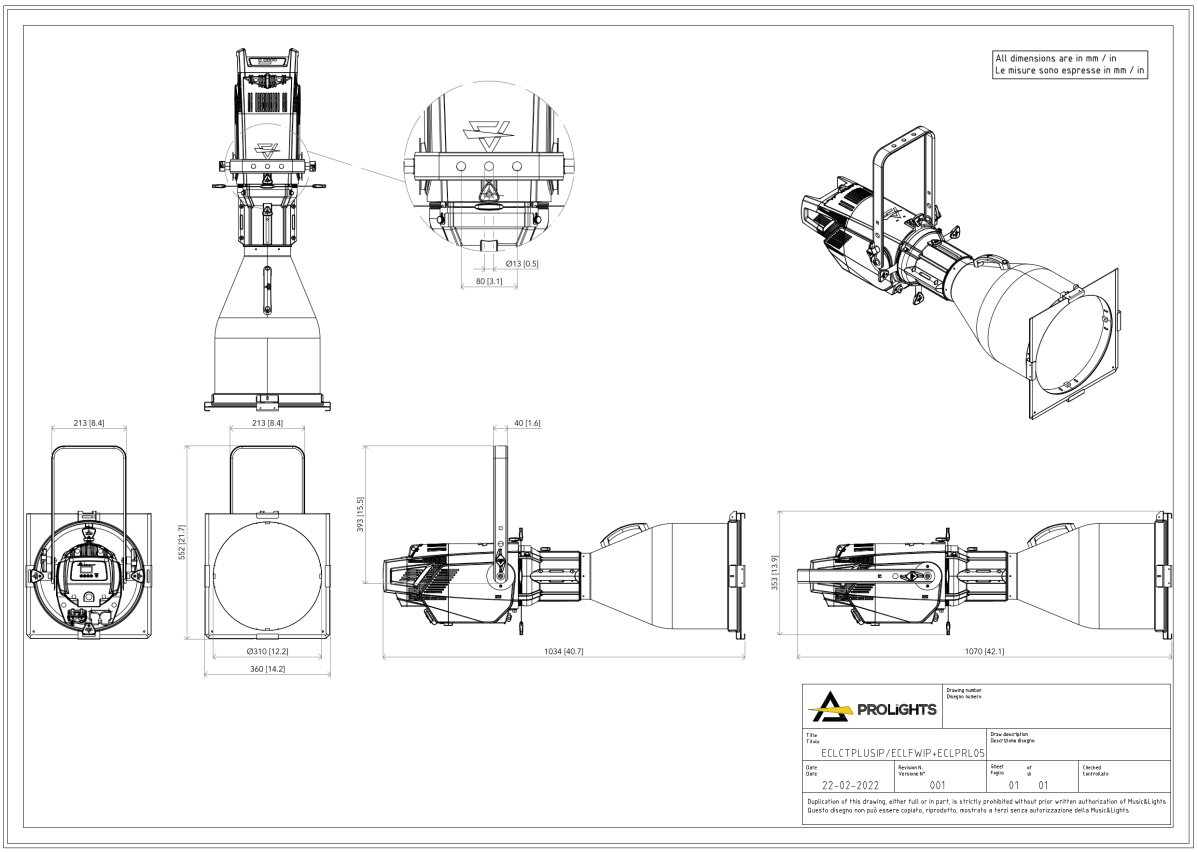

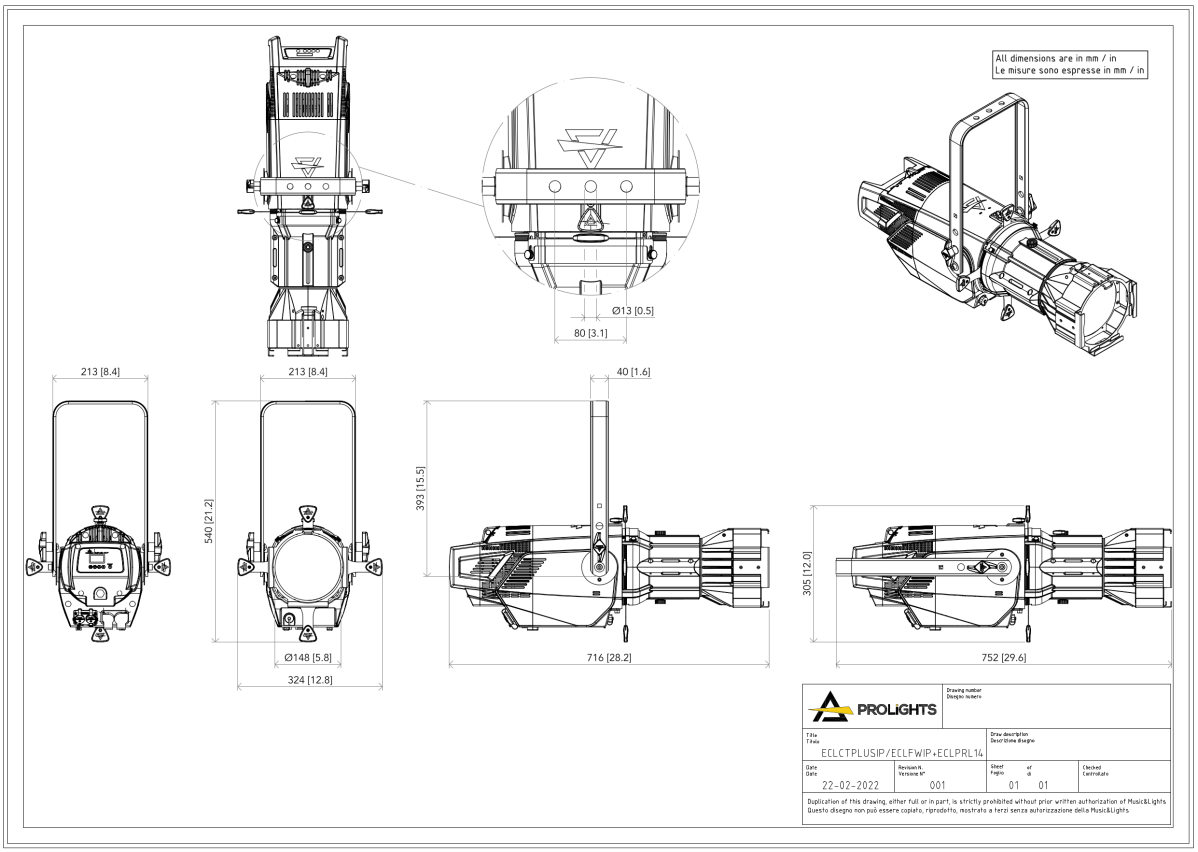

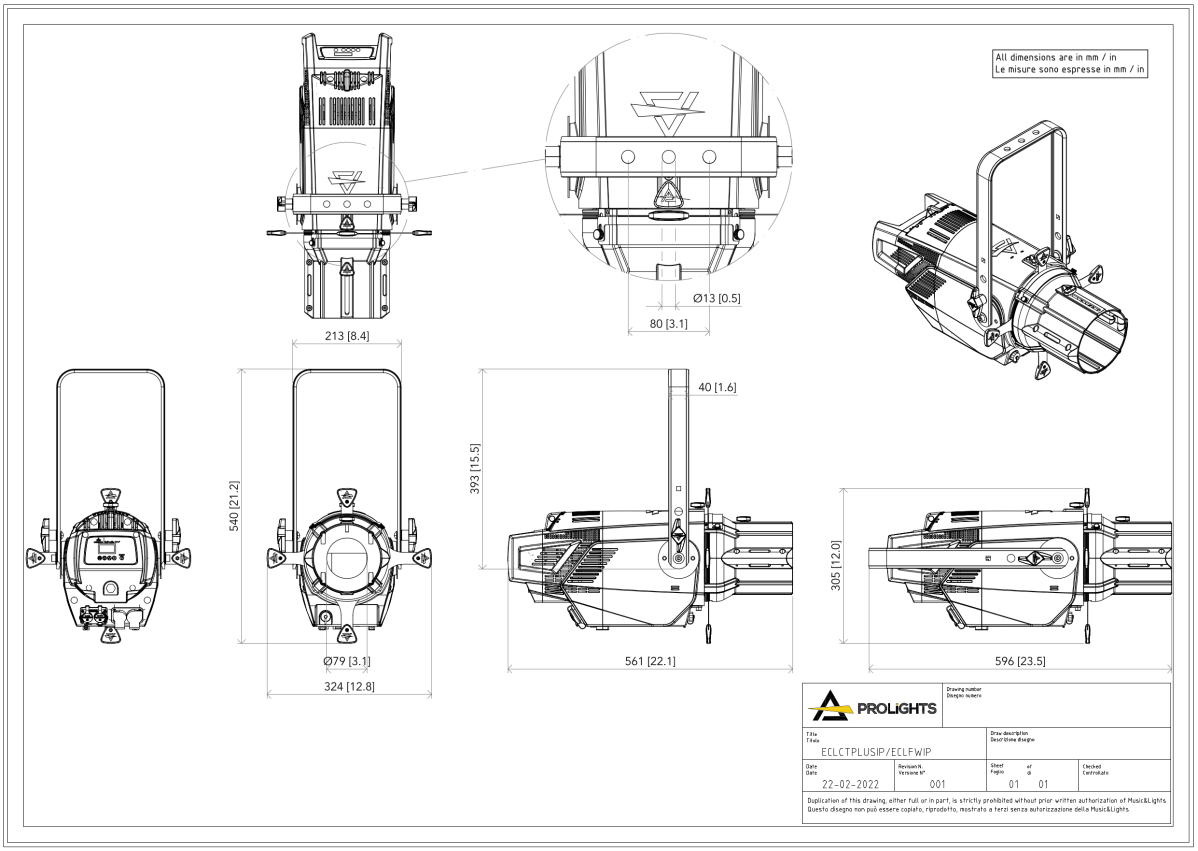

Downloaded on 29/11/2026 - data may be provisional: features, specifications and appearance are subject to change without notice

PHOTOMETRICS

Full On - PRL25-50 Min Zoom

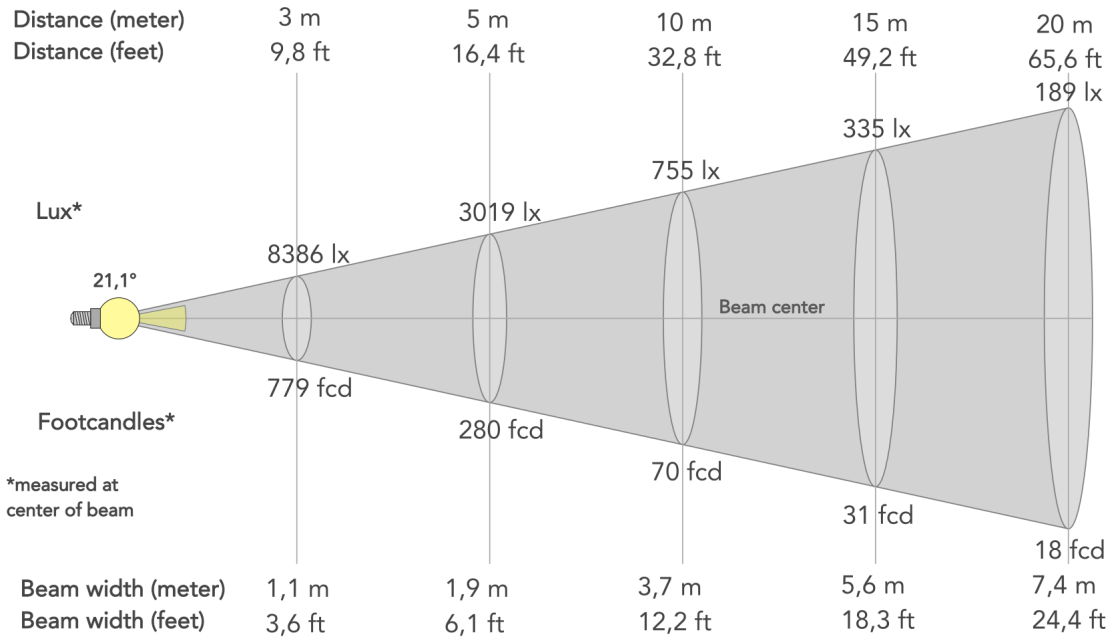

Beam angle (50%): **21.1°**	Field angle (10%): **24.5°**	Cut-off angle (2.5%): **25.6°**

Full On - PRL25-50 Max Zoom

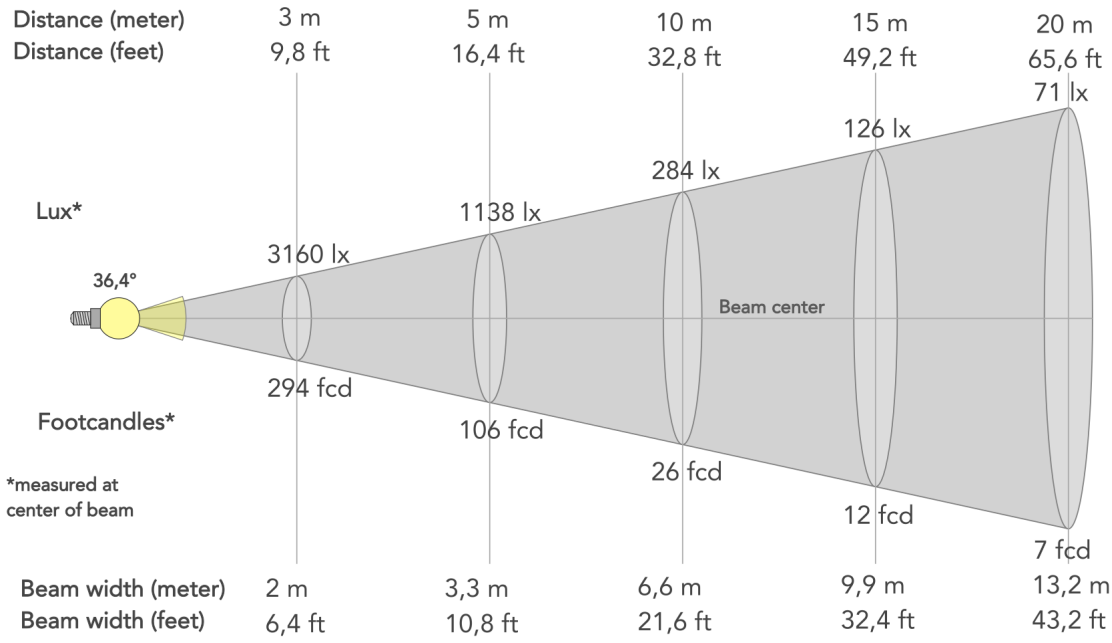

Beam angle (50%): **36.4°**	Field angle (10%): **42.8°**	Cut-off angle (2.5%): **45°**

Downloaded on 29/11/2026 - data may be provisional: features, specifications and appearance are subject to change without notice