EclProfile HDTWC

ORDER CODE: **ECLHDTWCBK**



VERSIONS

	Code	Housing
	**ECLHDTWCBK**	**Black**
	ECLHDTWCWH	White

SOURCE
91x3,5W 6 colour custom LEDs source (red, orange, green, royal blue, blue, lime)

IP RATING
IP20

WEIGHT
7,8kg / 17.2lbs

LUMINOUS FLUX (MAX)
6'415 lm

CRI
89 @3.200 K

Downloaded on 29/11/2026 - data may be provisional: features, specifications and appearance are subject to change without notice

TECHNICAL SPECIFICATIONS

LIGHT SOURCE

Source:	91x3,5W 6 colour custom LEDs source (red, orange, green, royal blue, blue, lime)
Source CCT:	2.800 K - 10.000K
Luminous flux:	(5°) TBD; (10°) TBD; (14°) 4'212 lm; (19°) 5'235 lm; (26°) 5'669 lm; (36°) 6'415 lm; (50°) 5'856 @Full
Lux:	(5°) TBD; (10°) TBD; (14°) 4'965 lx; (19°) 3'084 lx - (26°) 2'018 lx - (36°) 958 lx - (50°) 503lx @5 m full
CRI:	89 @3.200 K; 93,6 @5.600 K
R9:	90 @3.200 K; 95,4 @5.600 K
TLCI:	89 @5.600 K
TM30 Rf:	90 @5.600 K
TM30 Rg:	106 @5.600 K
Source life expectancy:	> 50.000 h

OPTICS

Beam angle:	optional 5° / 10° / 14° / 19° / 26° / 36° / 50° / zoom 15°-30° / zoom 25°-50°
Lens type:	high-quality glass lens optics
Focus:	manual

COLOUR SYSTEM

CCT:	CCT control, + / - green correction, tungsten emulation
White presets:	2.800 K - 10.000K
Colour wheel:	virtual colour wheel with macros

GOBOS

Gobo size:	(B size) 86 mm outer / 64.5 mm image / 1.1 mm thickness

DYNAMIC EFFECTS

Static mode:	selection of static colour
Manual mode:	manual adjustment of dimmer and strobe
Auto mode:	built-in programs with execution speed adjustment
Special features:	linear crossfade channel from any white to any colour; virtual CTO on colours

CONTROL

Supported Protocols:	DMX512, RDM
DMX channels:	2 / 5 CH1 / 5 CH2 / 7 / 9 / 12 / 13 / 16 / 19 / 21ch
RDM:	for remote addressing and parameter configuration
Display:	Graphic User Interface
Master/Slave:	for synchronised operation of more units linked in a chain
Other:	16bit control of dimmer and colour

ELECTRONICS

Dimmer:	linear 0 - 100% electronic dimmer
Dimmer curves:	4 selectable dimming modes available
Strobe / shutter:	1 - 30 Hz, electronic
Selectable PWM:	600 to 25,000 Hz (selectable steps)
Firmware upgrade with:	via DMX with UPBOXPRO/ UPBOX1 (not included)

CONNECTIONS

Power connection:	Neutrik powerCON IN/OUT connectors
Signal connection:	Amphenol XLR 5p IN/OUT connectors

INSTALLATION

Suspension and fixing:	bracket for hanging and floor positioning

Downloaded on 29/11/2026 - data may be provisional: features, specifications and appearance are subject to change without notice

TECHNICAL SPECIFICATIONS

ELECTRICAL

Mains power supply:	100-240V - 50/60Hz
Max power consumption (230V):	250W
Output (at 230V):	14 units on a single power line
Power factor:	>0,94

PHYSICAL

IP rating:	IP20
Cooling:	heat pipe with low-noise fan
Housing:	Sturdy die-cast aluminium body
Finish:	black
Operating temperature:	Ta -10 to +45 °C (+14 to +113 °F)
Dimensions (WxHxD):	262x551x595mm
Weight:	7,8kg

CERTIFICATIONS / REPORTS

Compliance:	CE, UKCA, RCM

BOX CONTENT

1 x ECLHDTWC

1 x 1,5 meters power cable (BARE END - NEUTRIK POWERCON)

ACCESSORIES & RELATED PRODUCTS



ECLLZ1530
Optics for ECLFC/HDL profiler, gel frame holder included, zoom 15°-30°



ECLLZ2550
Optics for ECLFC/HDL profiler, gel frame holder included, zoom 25°-50°



ECLLB05BK
5° lens barrel for Ecl Profile fixtures, filterframe included, black housing



ECLLB19BK
19° lens barrel for Ecl Profile fixtures, filterframe included, black housing



ECLLB19WH
19° lens barrel for Ecl Profile fixtures, filterframe included, white housing



ECLLB26BK
26° lens barrel for Ecl Profile fixtures, filterframe included, black housing



ECLLB36BK
36° lens barrel for Ecl Profile fixtures, filterframe included, black housing



ECLLB50WH
50° lens barrel for Ecl Profile fixtures, filterframe included, white housing



ECLLB50BK
50° lens barrel for Ecl Profile fixtures, filterframe included, black housing



ECLGH
Gobo holder for ECL/ECLFC/ECLHDL profiler



ECLIRIS2
Steel iris diaphragm for ECLFC/ECLHDL profiler



ECLPROFILESEF1
Soft edge filter and holder kit for ECL profile projectors series



UPBOXPRO
Firmware uploader kit, USB IN, 5-pin XLR DMX OUT connector

TECHNICAL DRAWINGS

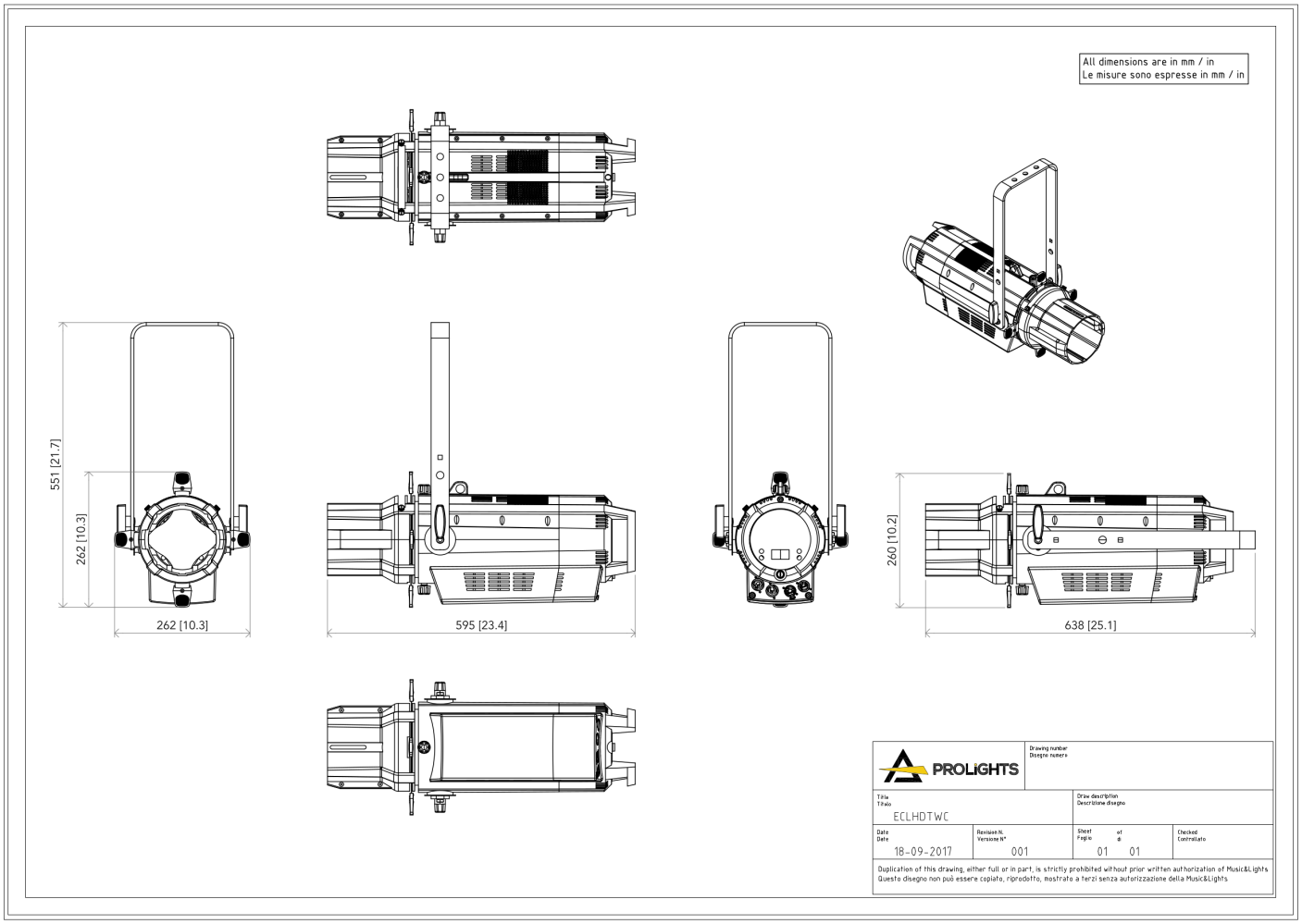

PHOTOMETRICS

Full on - PRL26

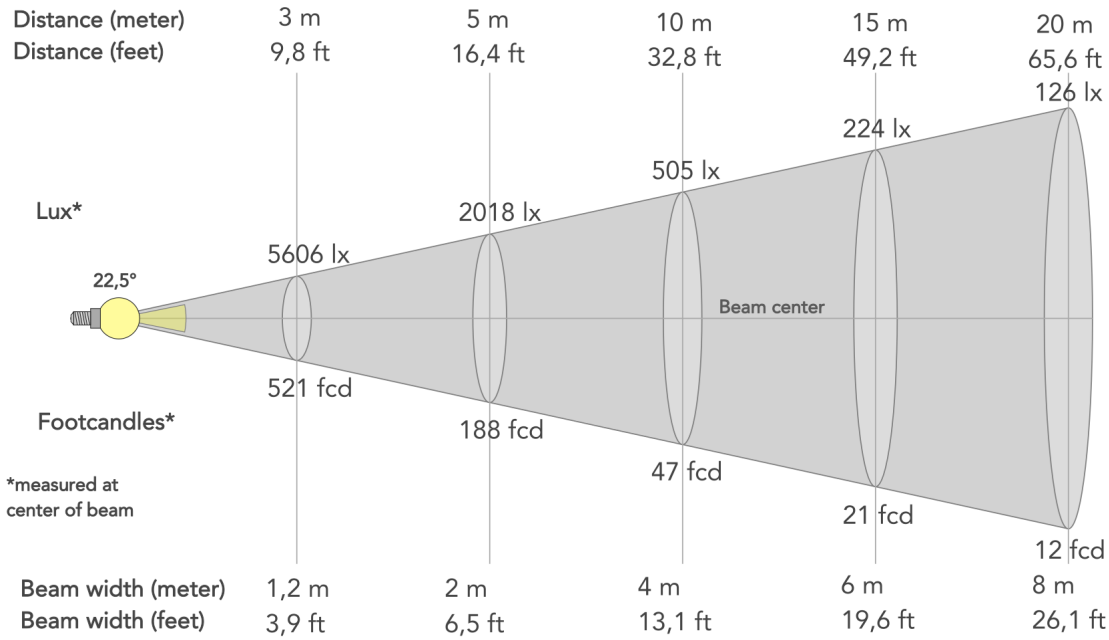

Beam angle (50%): **22.5°**	Field angle (10%): **26.2°**	Cut-off angle (2.5%): **28.8°**

MUSIC & LIGHTS S.r.l. | Via A. Olivetti, snc
04026 - Minturno (LT) ITALY | info@prolights.it
Tel: +39 0771 72190 | **prolights.it**
VAT No. IT 02057590594

Downloaded on 29/11/2026 - data may be provisional: features, specifications and appearance are subject to change without notice