EclPanel TWC

ORDER CODE: ECLPANELTWC



SOURCE	IP RATING	WEIGHT
740W RGB + Warm White LEDs (driven @ 430W)	**IP20**	**15,3kg / 33.73lbs**

CRI
94,6 @3.200 K

TECHNICAL SPECIFICATIONS

LIGHT SOURCE

Source:	740W RGB + Warm White LEDs (driven @ 430W)
Luminous flux:	34'236 @4.000 K with MD filter
Lux:	@4000K, 517lx @5 m
CRI:	94,6 @3.200 K; 95,5 @5.600 K
R9:	97 @3.200 K; 92 @5.600 K
TLCI:	92 @5.600 K
TM30 Rf:	92 @3.200 K; 89,5 @5.600 K
TM30 Rg:	103 @3.200 K; 102,4 @5.600 K
Source life expectancy:	> 50.000 h

OPTICS

Beam angle:	102°
Field angle:	159°
Lens type:	Medium Density diffusion panel (interchangeable)
Additional optics:	see available accessories

COLOUR SYSTEM

Colour control:	XY, CCT, RGBW, Gel, HSI, Source Emulation, Colour Macros, CTO on colours
CCT:	Max CCT control range from 2.200K to 15.000K, + / - green correction, tungsten emulation
White presets:	2.800K - 10.000K with 28 K resolution
Colour wheel:	virtual colour wheel with macros
Macros:	Gels library on-board

DYNAMIC EFFECTS

Control Resolution:	16-bit dimmer and color control
Pixel patterns:	pre-programmed pixel macros and cinema lighting effects
Special features:	linear crossfade channel from any white to any colour; virtual CTO on colours

CONTROL

Supported Protocols:	DMX512, RDM, CRMX + WDMX
Pixel control:	8 section control
RDM:	for remote addressing and parameter configuration
Display:	Graphic User Interface
Stand Alone:	selectable mode through 3 rotatory knobs

ELECTRONICS

Dimmer:	linear 0 - 100% electronic dimmer
Dimmer curves:	4 selectable dimming modes available
Strobe / shutter:	1 - 30 Hz, electronic
Selectable PWM:	600 to 36,000 Hz (selectable steps)
Firmware upgrade with:	via DMX with UPBOXPRO/ UPBOX1 (not included)

CONNECTIONS

Power connection:	Neutrik powerCON TRUE1 IN/OUT connectors
Signal connection:	Amphenol XLR 5p IN/OUT connectors
Wireless Connection:	integrated LumenRadio TiMo FX RDM - CRMX and W-DMX compatible
Low Voltage DC connector:	XLR 4p

ELECTRICAL

Mains power supply:	100-240V - 50/60Hz
Low Voltage DC mains:	24-36V
Max power consumption (230V):	460W
Output (at 230V):	6 units on a single power line
Power factor:	>0,94

Downloaded on 27/11/2026 - data may be provisional: features, specifications and appearance are subject to change without notice

TECHNICAL SPECIFICATIONS

PHYSICAL

IP rating:	IP20
Cooling:	forced-air with low-noise fan
Housing:	Sturdy die-cast aluminium body
Finish:	black
Operating temperature:	Ta -10 to +45 °C (+14 to +113 °F)
Dimensions (WxHxD):	819x431x144mm
Dimensions with PO system (WxHxD):	836x431x144mm
Weight:	15,3kg
Weight with PO system:	17,1kg

BOX CONTENT

1 x ECLPANELTWC

1 x ECLFRSPG

1 x 1,5 meters 3G1,5mmq power cable (BARE END - NEUTRIK POWERCON TRUE1 IP65 power connector)

INSTALLATION

Suspension and fixing:	bracket for hanging and floor positioning

CERTIFICATIONS / REPORTS

Compliance:	CE, UKCA, RCM, cTUVus, FCC

Downloaded on 27/11/2026 - data may be provisional: features, specifications and appearance are subject to change without notice

ACCESSORIES & RELATED PRODUCTS



UPBOXPRO
Firmware uploader kit, USB IN, 5-pin XLR DMX OUT connector



FCLPANEL1U
Flight case for 1 pc of ECLPANELTWC



FCLPANEL3U
Flight case for 3 pcs of ECLPANELTWC



EPTWCBAG1U
Trolley bag for 1 pc of ECLPANELTWC



EPTWCBHEAD
Ball head joint for center mount bracket EPTWCBRK series



EPTWCBRKL
Center mount bracket for ECLPANELTWC and ECLPANELTWCJR4X1



EPTWCRC
Rain Cover for ECLPANELTWC



ECLPANELPOYO
Pole operated aluminium yoke bracket for ECLPANELTWC



EPTWCFILTERINT
Front intensified diffusion filter for ECLPANELTWC



EPTWCFILTERHD
Front high diffusion filter (less output) for ECLPANELTWC



EPTWCFILTERMD
Front medium diffusion filter for ECLPANELTWC



EPTWCFILTERLD
Front low diffusion filter (more output) for ECLPANELTWC



ECLFRSPG
Spigot for PROLIGHTS fixtures



EPTWCEC30
30 degree egg crate for ECLPANELTWC

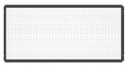

EPTWCEC60
60 degree egg crate for ECLPANELTWC



EPTWCEC8C
8 chamber egg crate for ECLPANELTWC



EPTWCBDR2
Barn door with 4 directional flaps to adjust the light beam



AETHERBOXONE
IP65 1x universe CRMX transceiver, DMX, Ethernet protocols, Wi-Fi, Bluetooth, battery-ready, POE

Downloaded on 27/11/2026 - data may be provisional: features, specifications and appearance are subject to change without notice

TECHNICAL DRAWINGS

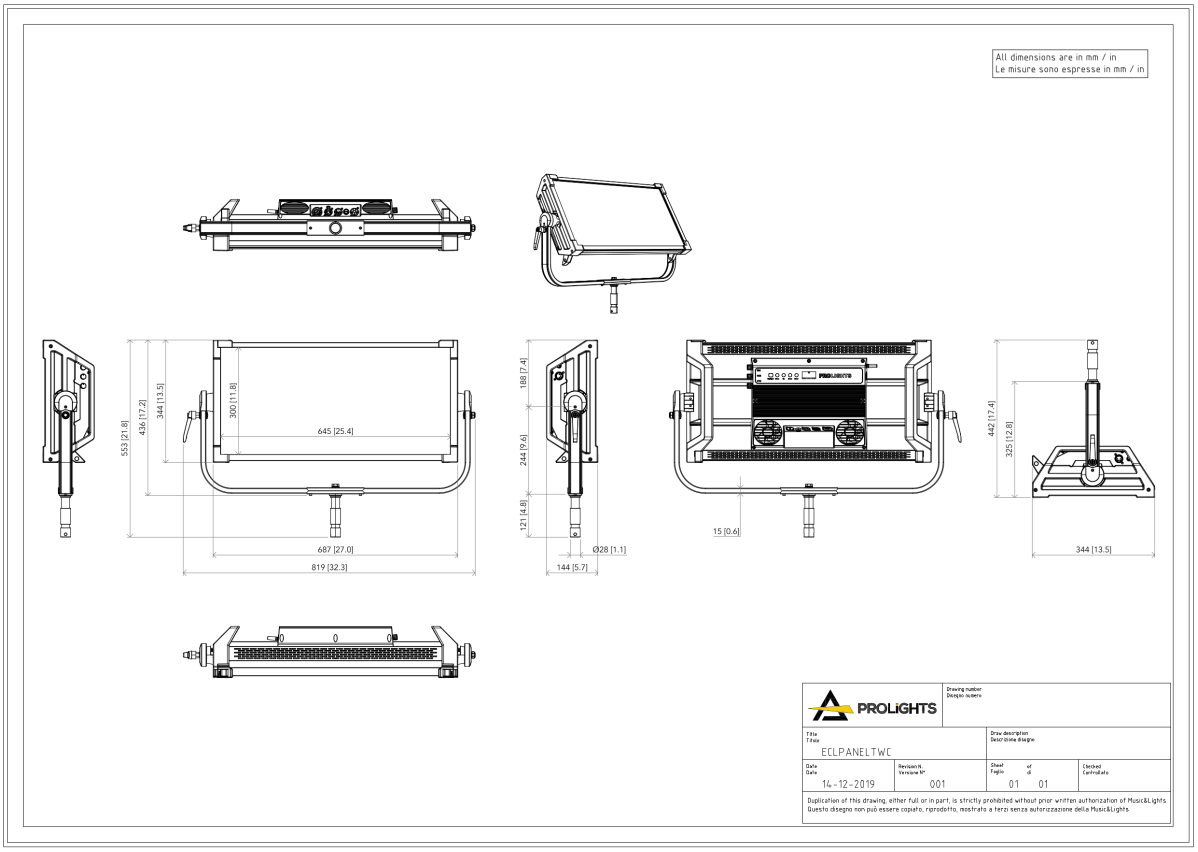

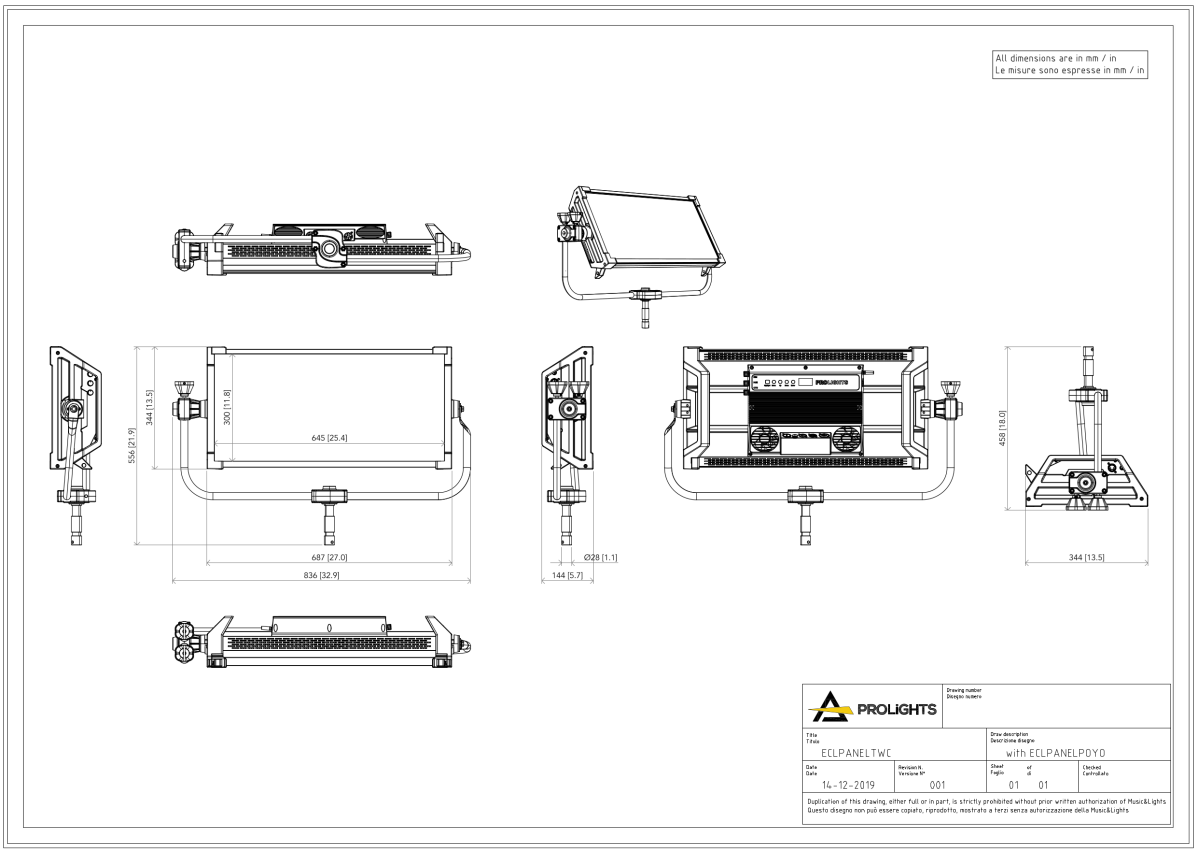

Downloaded on 27/11/2026 - data may be provisional: features, specifications and appearance are subject to change without notice

PHOTOMETRICS

Full On - Filter HD

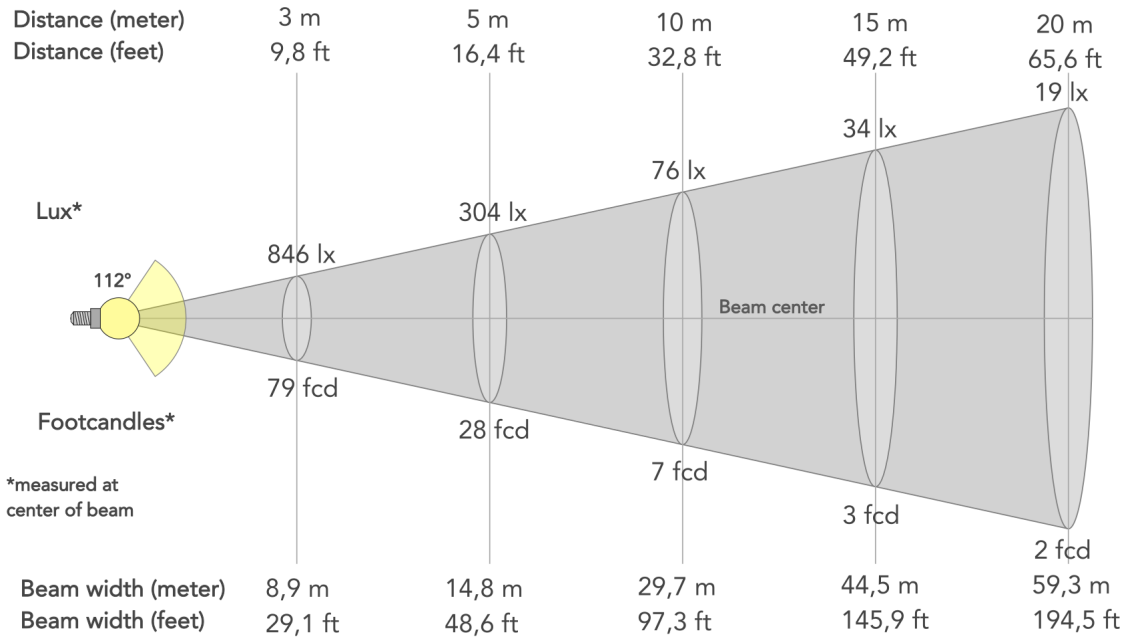

Beam angle (50%): **112°**	Field angle (10%): **161.8°**	Cut-off angle (2.5%): **177.1°**

MUSIC & LIGHTS S.r.l. | Via A. Olivetti, snc
04026 - Minturno (LT) ITALY | info@prolights.it
Tel: +39 0771 72190 | **prolights.it**
VAT No. IT 02057590594

Downloaded on 27/11/2026 - data may be provisional: features, specifications and appearance are subject to change without notice