EclPanel TWCXL

ORDER CODE: ECLPANELTWCXL



SOURCE
1.500W RGB + Warm White LED

IP RATING
IP20

WEIGHT
48,7kg / 107.36lbs

CRI
93,4 @3.200 K

TECHNICAL SPECIFICATIONS

LIGHT SOURCE

Source:	1.500W RGB + Warm White LED
Luminous flux:	130'725 @3.200 K with LD filter
Lux:	2'442lx @5 m full
CRI:	93,4 @3.200 K; 95.4 @5.600 K
R9:	95.6 @3.200 K; 95,9 @5.600 K
TLCI:	93 @5.600 K
TM30 Rf:	91,9 @3.200 K; 90,3 @5.600 K
TM30 Rg:	103,5 @3.200 K; 102,5 @5.600 K
Source life expectancy:	> 50.000 h

OPTICS

Beam angle:	109°
Field angle:	158°
Lens type:	medium density diffusion panel (interchangeable)
Additional optics:	see available accessories

COLOUR SYSTEM

Colour control:	XY, CCT, RGBW, Gel, HSI, Source Emulation, Colour Macros, CTO on colours
CCT:	CCT control range from 1.800K to 20.000K, + / - green correction, tungsten emulation
White presets:	1.800 K - 20.000K
Colour wheel:	virtual colour wheel with macros
Macros:	Gels library on-board

DYNAMIC EFFECTS

Control Resolution:	16-bit dimmer and color control
Pixel patterns:	pre-programmed pixel macros and cinema lighting effects
Special features:	linear crossfade channel from any white to any colour; virtual CTO on colours

CONTROL

Supported Protocols:	DMX512, RDM, ArtNet, sACN, CRMX
Pixel control:	48 section control
RDM:	for remote addressing and parameter configuration
Display:	3.5" with new UI
Stand Alone:	selectable mode through 4 RGB backlight push-encoders

ELECTRONICS

Dimmer:	linear 0 - 100% electronic dimmer
Dimmer curves:	4 selectable dimming modes available
Strobe / shutter:	1 - 30 Hz, electronic
Display battery:	included, self-charging battery backup
Selectable PWM:	600 to 40,000 Hz (selectable steps)
Firmware upgrade with:	via DMX with UPBOXPRO/ UPBOX1 (not included)

CONNECTIONS

Power connection:	32A Neutrik powerCON IN
Signal connection:	Amphenol XLR 5p IN/OUT connectors
Wireless Connection:	integrated LumenRadio TiMo FX RDM - CRMX and W-DMX compatible

ELECTRICAL

Mains power supply:	100-240V - 50/60Hz
Max power consumption (230V):	1.600W
Output (at 230V):	1 units on a single power line
Standby power:	110VAC/21W, 230VAC/26W
Power factor:	>0,98

Downloaded on 29/11/2026 - data may be provisional: features, specifications and appearance are subject to change without notice

TECHNICAL SPECIFICATIONS

PHYSICAL

IP rating:	IP20
Cooling:	forced-air with low-noise fan
Housing:	Sturdy die-cast aluminium body
Finish:	black
Operating temperature:	Ta -10 to +45 °C (+14 to +113 °F)
Dimensions (WxHxD):	1623x1201x186mm
Weight:	48,7kg

INSTALLATION

Suspension and fixing:	bracket for hanging and floor positioning

CERTIFICATIONS / REPORTS

Compliance:	CE, UKCA, RCM, cTUVus, FCC

BOX CONTENT

1 x ECLPANELTWCXL

1 x EPTWCXLSPG

1 x 2,5 meters 3G4mmq power cable (BARE END - 32A NEUTRIK POWERCON TRUE1 IP65 power connector)

ACCESSORIES & RELATED PRODUCTS



EPTWCXLSPG
Spigot for ECLPANELTWCXL



FCLPANELXL1U
Flight case for 1 pc of ECLPANELTWCXL



EPTWCXLFILTERINT
Front intensified diffusion filter for ECLPANELTWCXL



EPTWCXLFILTERHD
Front high diffusion filter (less output) for ECLPANELTWCXL



EPTWCXLFILTERMD
Front medium diffusion filter for ECLPANELTWCXL



EPTWCXLFILTERLD
Front low diffusion filter (more output) for ECLPANELTWCXL

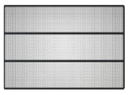

EPTWCXLEC30
30 degree egg crate for ECLPANELTWCXL



EPTWCXLEC60
60 degree egg crate for ECLPANELTWCXL

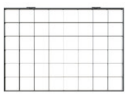

EPTWCXLEC48C
48 chambers egg crate for ECLPANELTWCXL



EPTWCXLSB
Short bracket for ECLPANELTWCXL



EPTWCXLRC
Rain Cover for ECLPANELTWCXL



UPBOXPRO
Firmware uploader kit, USB IN, 5-pin XLR DMX OUT connector



AETHERBOXONE
IP65 1x universe CRMX transceiver, DMX, Ethernet protocols, Wi-Fi, Bluetooth, battery-ready, POE

Downloaded on 29/11/2026 - data may be provisional: features, specifications and appearance are subject to change without notice

TECHNICAL DRAWINGS

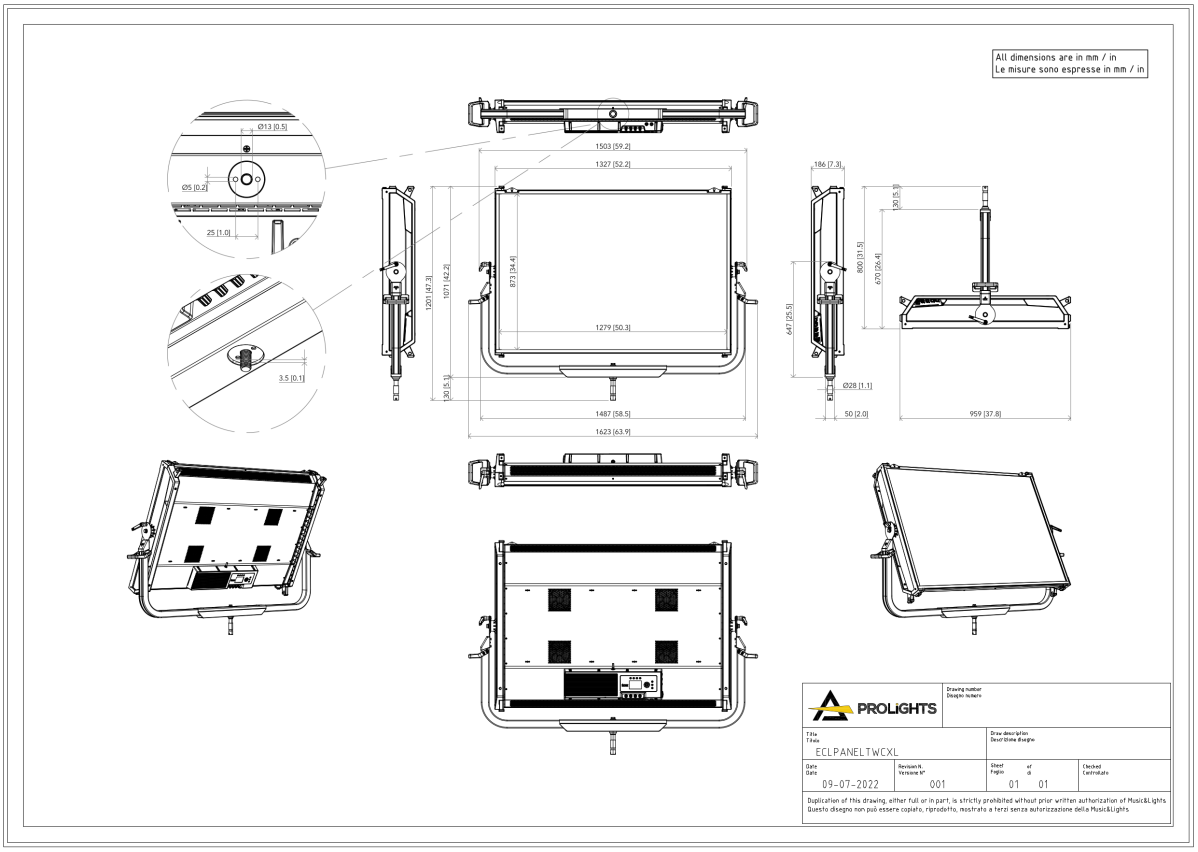

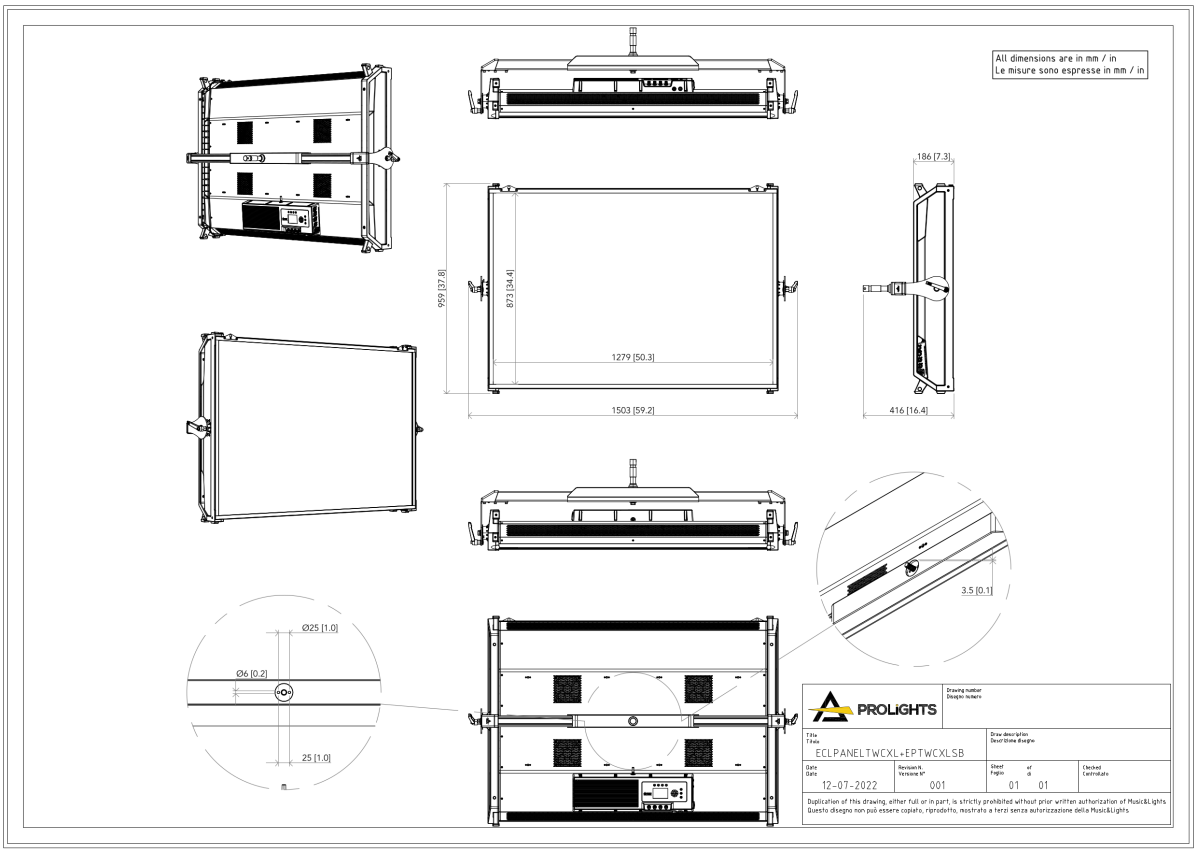

Downloaded on 29/11/2026 - data may be provisional: features, specifications and appearance are subject to change without notice

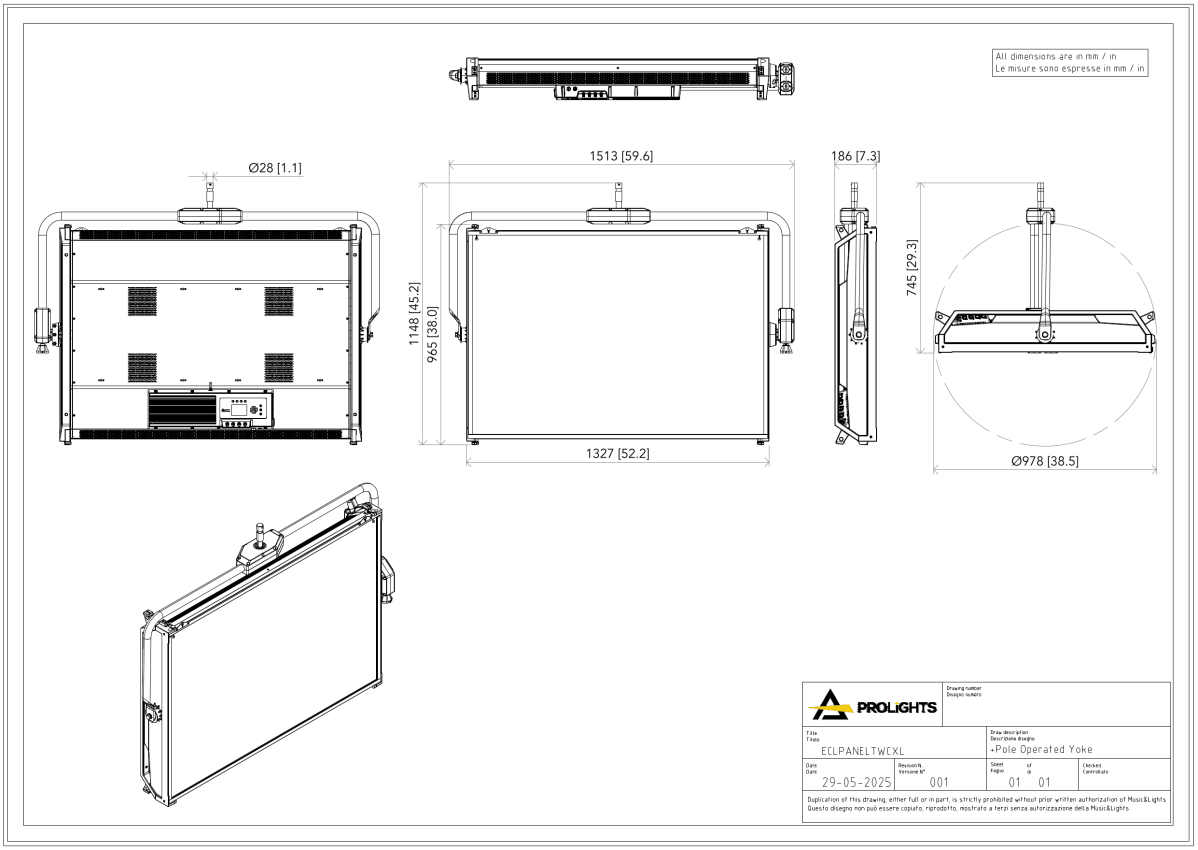
All dimensions are in mm / in
Le misure sono espresse in mm / in
Ø28 [1.1]
1513 [59.6]
186 [7.3]
745 [29.3]
1148 [45.2]
965 [38.0]
1327 [52.2]
Ø978 [38.5]
PROLIGHTS
ECLPANELTWCXL
+Pole Operated Yoke
29-05-2025
001
01 01
Duplication of this drawing, either full or in part, is strictly prohibited without prior written authorization of Music&Lights.
Questo disegno non può essere copiato, riprodotto, mostrato a terzi senza autorizzazione della Music&Lights.

PHOTOMETRICS

Full On Call.On - Filter HD

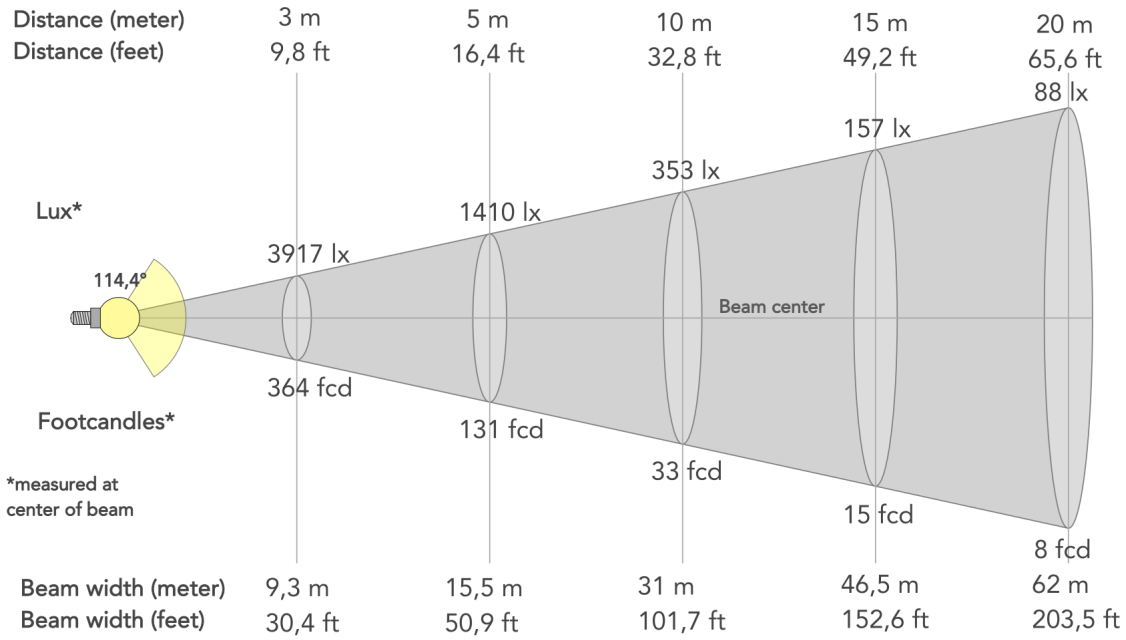

Beam angle (50%): **114.4°**	Field angle (10%): **160.3°**	Cut-off angle (2.5%): **172.5°**