EclPar FC

ORDER CODE: ECLPARFC



SOURCE	IP RATING	WEIGHT
150W RGB + Warm White LEDs	**IP20**	**5,7kg / 12.57lbs**

LUMINOUS FLUX (MAX)	CRI
5'983 lm	**95 @3.200 K**

Downloaded on 27/11/2026 - data may be provisional: features, specifications and appearance are subject to change without notice

TECHNICAL SPECIFICATIONS

LIGHT SOURCE

Source:	150W RGB + Warm White LEDs
Source CCT:	2.800 K - 6.500K
Luminous flux:	(24°) 5'983 lm - (73°) 5'774 @Full
Lux:	(24°) 1'040 lx - (73°) 166lx @5 m full
CRI:	95 @3.200 K; 92 @5.600 K
R9:	98 @3.200 K; 96 @5.600 K
TLCI:	85 @5.600 K
TM30 Rf:	92 @3.200 K; 90 @5.600 K
TM30 Rg:	105 @3.200 K; 106 @5.600 K
Source life expectancy:	> 50.000 h

OPTICS

Beam angle:	(on board) 24° or (included) 73°
Field angle:	(on board) 28° or (included) 104°
Lens diameter:	163mm
Lens type:	fresnel lens
Additional optics:	24° lens on board - 73° lens included - 40° lens optional - egg crate optional - barndoors optional - gel frame holder included
Other:	12° lens not available

COLOUR SYSTEM

CCT:	CCT control, + / - green correction, tungsten emulation
White presets:	2.800 K - 6.500K
Colour wheel:	virtual colour wheel with macros
Macros:	built-in white presets

DYNAMIC EFFECTS

Static mode:	selection of static colour
Manual mode:	manual adjustment of colour
Auto mode:	built-in programs with execution speed adjustment
Special features:	linear crossfade channel from any white to any colour; virtual CTO on colours

CONTROL

Supported Protocols:	DMX512, RDM
DMX channels:	(theatre) 1 / 2 / 4 / 5 / 6 / 10 / 15 / 17 ch - (tour) 4 / 6 / 10 / 15ch
RDM:	for remote addressing and parameter configuration
Display:	Graphic User Interface
Master/Slave:	for synchronised operation of more units linked in a chain

ELECTRONICS

Dimmer:	linear 0 - 100% electronic dimmer
Dimmer curves:	4 selectable dimming modes available
Strobe / shutter:	1 - 30 Hz, electronic
Selectable PWM:	600 to 25,000 Hz (selectable steps)
Firmware upgrade with:	via DMX with UPBOXPRO/ UPBOX1 (not included)

CONNECTIONS

Power connection:	Neutrik powerCON IN/OUT connectors
Signal connection:	Amphenol XLR 3p + 5p IN/OUT connectors

ELECTRICAL

Mains power supply:	100-240V - 50/60Hz
Max power consumption (230V):	150W
Output (at 230V):	14 units on a single power line
Power factor:	> 0.92

Downloaded on 27/11/2026 - data may be provisional: features, specifications and appearance are subject to change without notice

TECHNICAL SPECIFICATIONS

PHYSICAL

IP rating:	IP20
Cooling:	forced-air with low-noise fan
Housing:	Sturdy die-cast aluminium body
Finish:	black
Operating temperature:	Ta -10 to +45 °C (+14 to +113 °F)
Dimensions (WxHxD):	316x404x317mm
Weight:	5,7kg

INSTALLATION

Suspension and fixing:	any position with quick-lock Omega brackets

CERTIFICATIONS / REPORTS

Compliance:	CE, UKCA, RCM

BOX CONTENT

1 x ECLPARFC

1 x ECLPARLENS65

1 x ECLPARTPG

1 x 1,5 meters 3G1,5mmq power cable (BARE END - NEUTRIK POWERCON power connector)

ACCESSORIES & RELATED PRODUCTS



ECLPARBD
Barn door with directional flaps to adjust the light beam for ECLPAR series



FCLECLPAR
Flightcase for 6 pcs of ECLPAR



ECLPARLENS24
24° lens for ECLPAR projectors series



ECLPARLENS40
40° lens for ECLPAR projectors series



ECLPAREC
Egg crate for ECLPAR projectors series



ECLPARLENS65
73° lens for ECLPAR projectors series



ECLPARTPG
Gel filter frame for ECLPAR projectors



UPBOXPRO
Firmware uploader kit, USB IN, 5-pin XLR DMX OUT connector

Downloaded on 27/11/2026 - data may be provisional: features, specifications and appearance are subject to change without notice

TECHNICAL DRAWINGS

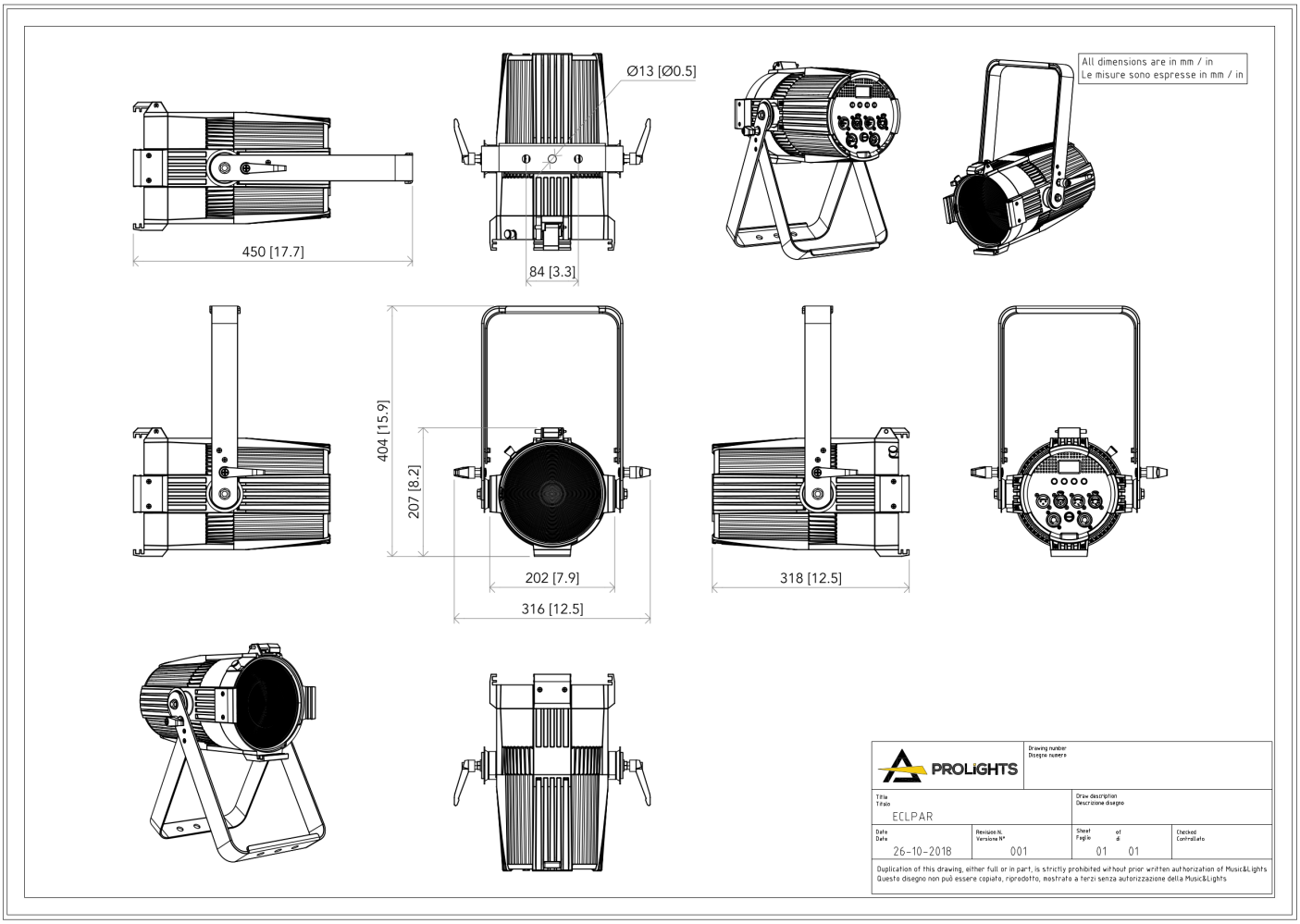

Downloaded on 27/11/2026 - data may be provisional: features, specifications and appearance are subject to change without notice