EclPar IPSVW

ORDER CODE: ECLPARIPSVWBK



SOURCE
60W Variable White LED

IP RATING
IP65 for temporary outdoor use

WEIGHT
2,8kg / 6.17lbs

CRI
96,9 @full

Downloaded on 27/11/2026 - data may be provisional: features, specifications and appearance are subject to change without notice

TECHNICAL SPECIFICATIONS

LIGHT SOURCE

Source:	60W Variable White LED
Luminous flux:	(15°) 3'438, (30°) 3'117, (60°) 3'258 @Full
Lux:	(15°) 1'840, (30°) 458, (60°) 169lx @5 m full
CRI:	96,9 @full; 96,2 @3'200K; 98 @5'600K
R9:	91,2 @3'200K; 96,4 @5'600K
TLCI:	99 @full; 98 @3'200K; 99 @5'600K
TM30 Rf:	94,2 @full; 95,2 @3'200K; 93,4 @5'600K
TM30 Rg:	102,3 @full; 103,1 @3'200K; 100,5 @5'600K
Source life expectancy:	> 50.000 h

OPTICS

Beam angle:	(on-board) 15° - (opt) 30°, 60°
Field angle:	(on-board) 23°
Lens diameter:	100mm
Lens type:	parabolic reflector in combination with HD fresnel lens
Additional optics:	(opt) 30°, 60°
Other:	possible to mount lens both on the internal side and on the external side

COLOUR SYSTEM

Colour mixing:	tunable white
CCT:	CCT control through dedicated DMX channel
White presets:	2.700 K ~ 6.500K
Macros:	built-in white presets

DYNAMIC EFFECTS

Static mode:	selection of static dimmer and color temperature
Manual mode:	manual adjustment of dimmer and strobe
Auto mode:	built-in programs with execution speed adjustment

CONTROL

Supported Protocols:	DMX512, RDM, CRMX (optional)
DMX channels:	1 / 2 / 4 / 5 / 9 / 11ch
RDM:	for remote addressing and parameter configuration
Display:	Graphic User Interface
Master/Slave:	for synchronised operation of more units linked in a chain

ELECTRONICS

Dimmer:	linear 0 - 100% electronic dimmer
Dimmer curves:	4 selectable dimming modes available
Strobe / shutter:	1 - 30 Hz, electronic
Selectable PWM:	600 to 40,000 Hz (selectable steps)
Firmware upgrade with:	via DMX with UPBOXPRO/ UPBOX1 (not included)

CONNECTIONS

Power connection:	Seetronic powerCON TRUE IP65 IN/OUT
Signal connection:	Seetronic XLR 5p IN/OUT connectors
Wireless Connection:	optional LumenRadio TiMo FX RDM - CRMX and W-DMX compatible

ELECTRICAL

Mains power supply:	100-240V - 50/60Hz
Max power consumption (230V):	65W
Standby power:	1,7 W
Power factor:	> 0,93

Downloaded on 27/11/2026 - data may be provisional: features, specifications and appearance are subject to change without notice

TECHNICAL SPECIFICATIONS

PHYSICAL

IP rating:	IP65 for temporary outdoor use
Cooling:	fan-free with natural convection
Housing:	Sturdy die-cast aluminium body
Finish:	black
Operating temperature:	Ta -20 to +45 °C (-4 to +113 °F)
Dimensions (WxHxD):	211x284x248mm
Weight:	2,8kg

(*)

NOTE:	Suitable for permanent outdoor use, provided that installation and periodic maintenance are carried out by qualified technicians.

INSTALLATION

Suspension and fixing:	double bracket for hanging and floor positioning
Other:	Front mount holder for accessories as barn door, filter frame

CERTIFICATIONS / REPORTS

Compliance:	CE, RCM, FCC, cTUVus

BOX CONTENT

1 x ECLPARIPSVW

1 x EPIPSLENS15

1 x 1,5 meters 3G1,5mmq power cable (BARE END - SEETRONIC POWERCON TRUE1 IP65 power connector)

ACCESSORIES & RELATED PRODUCTS



FCLECLPARIPS
Flight case for 8 pcs of ECLPARIPS series



EPIPSLENS30
ECLPARIPS series 30° lens



EPIPSFHBK
Empty filter holder for ECLPARIPS series, black



EPIPSFILT1040
Light diffusion filter for ECLPARIPS series, asymmetric 10°x40° (VxH)



EPIPSFILT3060
Light diffusion filter for ECLPARIPS series, asymmetric 30°x60° (VxH)



EPIPSFSNOOTBK
Full snoot for ECLPARIPS series, black



EPIPSCLOUVREBK
Concentric louvre for ECLPARIPS series, black



UPBOXPRO
Firmware uploader kit, USB IN, 5-pin XLR DMX OUT connector



EPIPSLENS15
ECLPARIPS series 15° lens



EPIPSLENS60
ECLPARIPS series 60° lens



EPIPSFILT1020
Light diffusion filter for ECLPARIPS series, asymmetric 10°x20° (VxH)



EPIPSFILT1060
Light diffusion filter for ECLPARIPS series, asymmetric 10°x60° (VxH)



ECLPARIPSBDBK
Barn door with 8 directional flaps to adjust the light beam, ECLPARIPS, black



EPIPSHLOUVREBK
Honeycomb louvre for ECLPARIPS series, black



ECLPARIPMWKBK
CRMX Timo Fx kit for ECLPARIP serie, black

TECHNICAL DRAWINGS

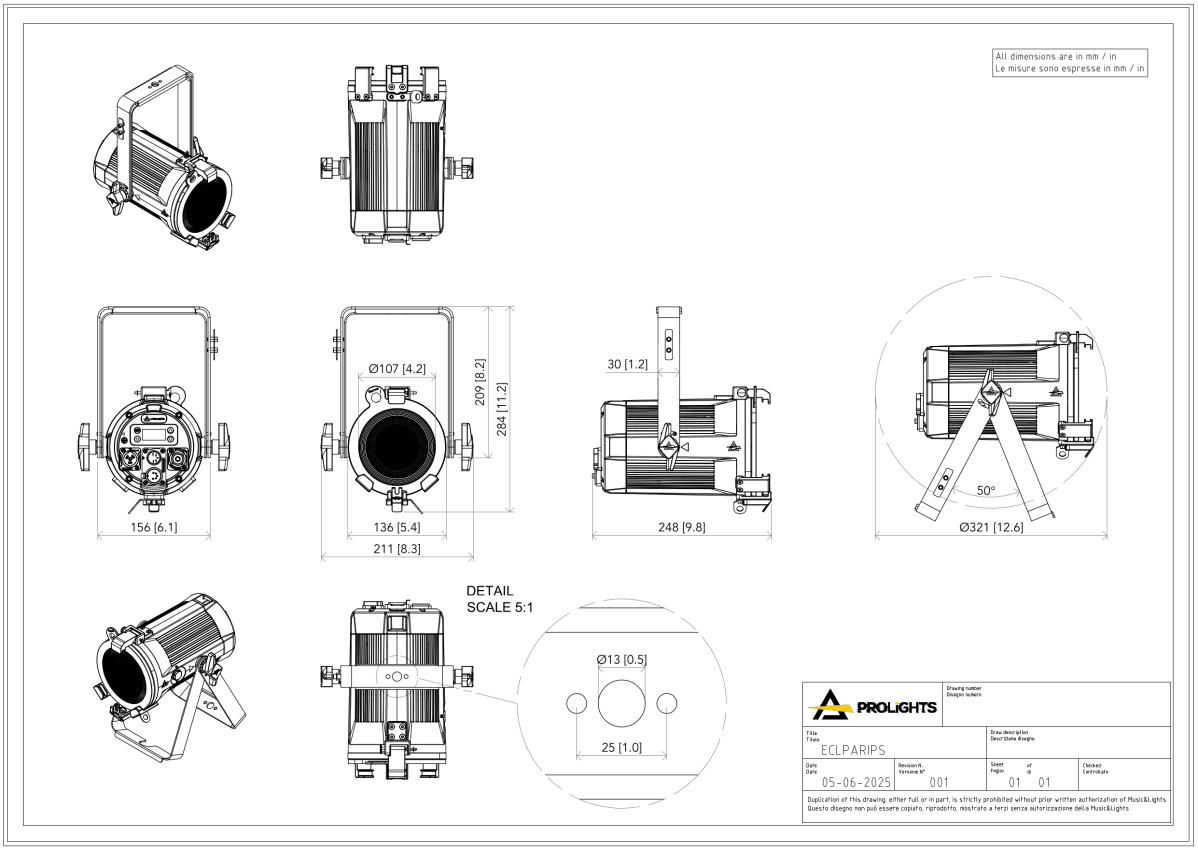

All dimensions are in mm / in
Le misure sono espresse in mm / in

EPIPLFSNOOT

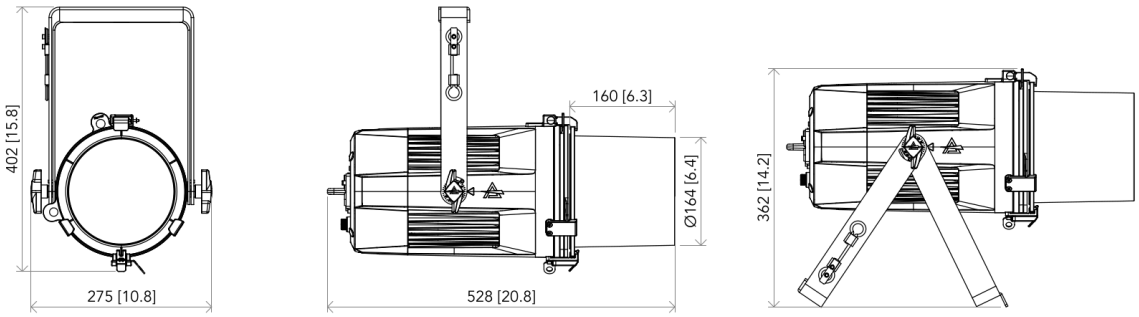

ECLPARIPLBD

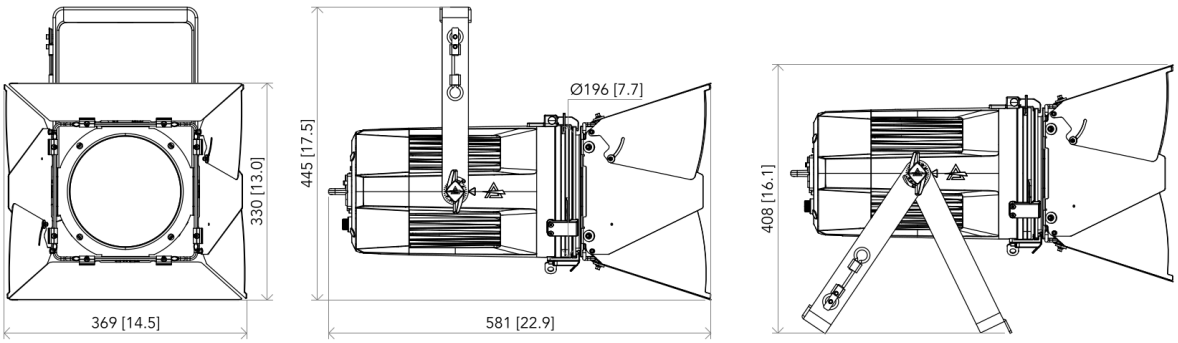

PROLIGHTS		Drawing number / Disegno numero: 01	
Title / Titolo: ECLPARIPL		Draw description / Descrizione disegno: With accessories	
Date / Date: 03-06-2025	Revision N. / Versione N°: 001	Sheet / Foglio: 01 of / di 01	Checked / Controllato

Duplication of this drawing, either full or in part, is strictly prohibited without prior written authorization of Music&Lights
Questo disegno non può essere copiato, riprodotto, mostrato a terzi senza autorizzazione della Music&Lights

PHOTOMETRICS

Beam angle 50%	Field angle 10%	Cut off angle 2,5%	Intensity ratio in 120° cone	Intensity ratio in 90° cone
14°	23,2°	31,6°	97,7%	94,7%

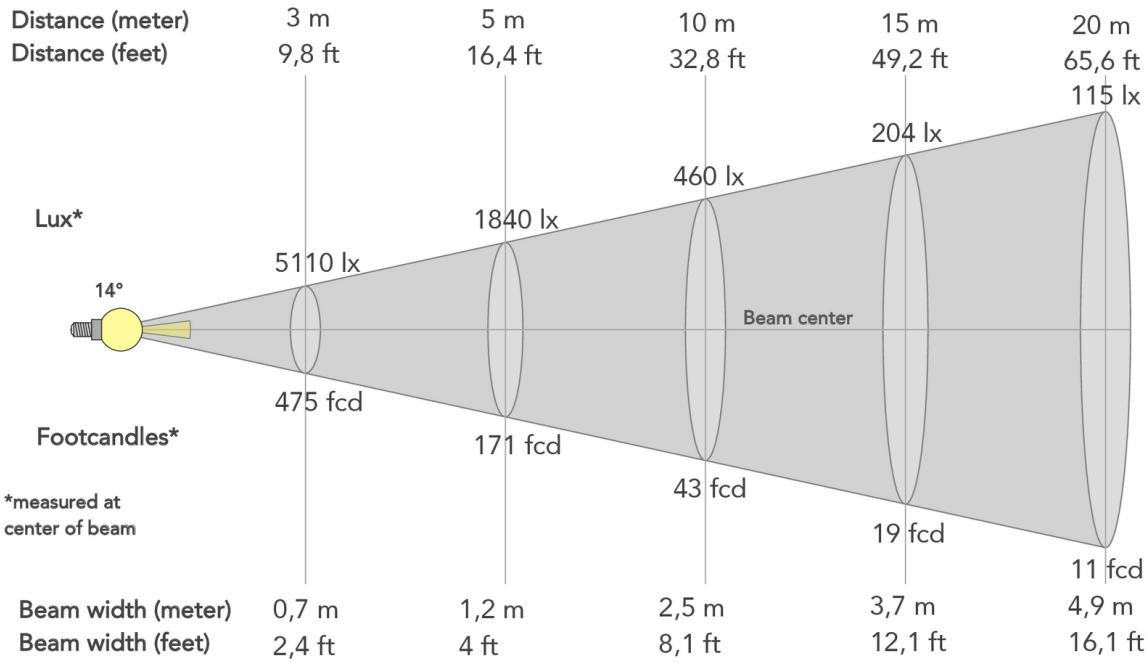

Beam angle 50%	Field angle 10%	Cut off angle 2,5%	Intensity ratio in 120° cone	Intensity ratio in 90° cone
51,8°	80,8°	97,3°	98,3%	95,1%

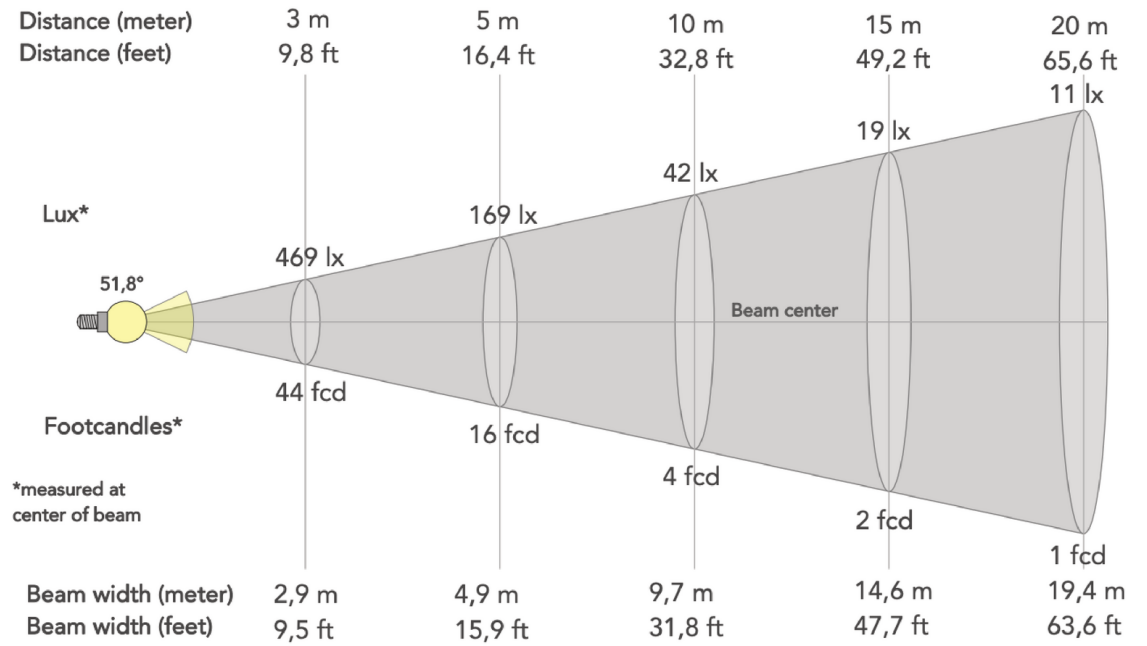

MUSIC & LIGHTS S.r.l. | Via A. Olivetti, snc 04026 - Minturno (LT) ITALY | info@prolights.it Tel: +39 0771 72190 | **prolights.it** VAT No. IT 02057590594

Downloaded on 27/11/2026 - data may be provisional: features, specifications and appearance are subject to change without notice