Eclpendwallbrk

ORDER CODE: ECLPENDWALLBRKBK

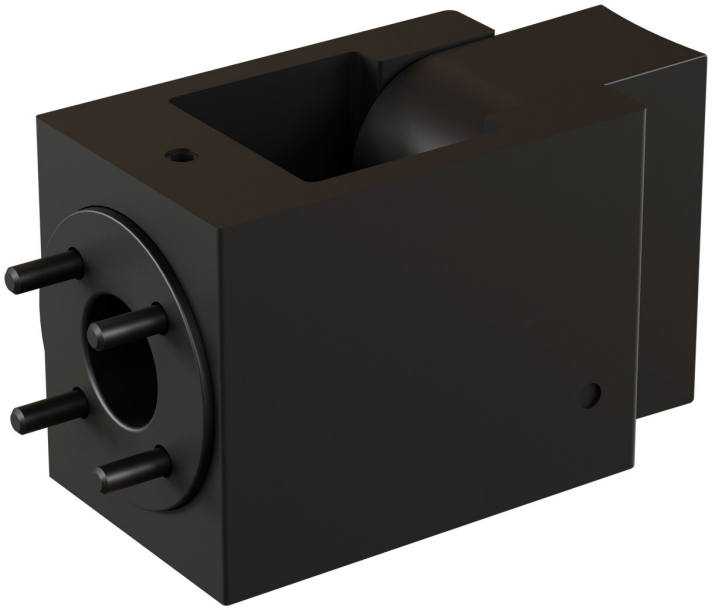

VERSIONS

	Code	Finishing
	**ECLPENDWALLBRKBK**	**Black**
	ECLPENDWALLBRKWH	White

ACCESSORIES & RELATED PRODUCTS



ECLPENDWALLBRKABK
Ring adapter for ECLPENDWALLBRK (not included), black



ECLPENDWALLBRKAWH
Ring adapter for ECLPENDWALLBRK (not included), white

Downloaded on 27/11/2026 - data may be provisional: features, specifications and appearance are subject to change without notice

TECHNICAL DRAWINGS

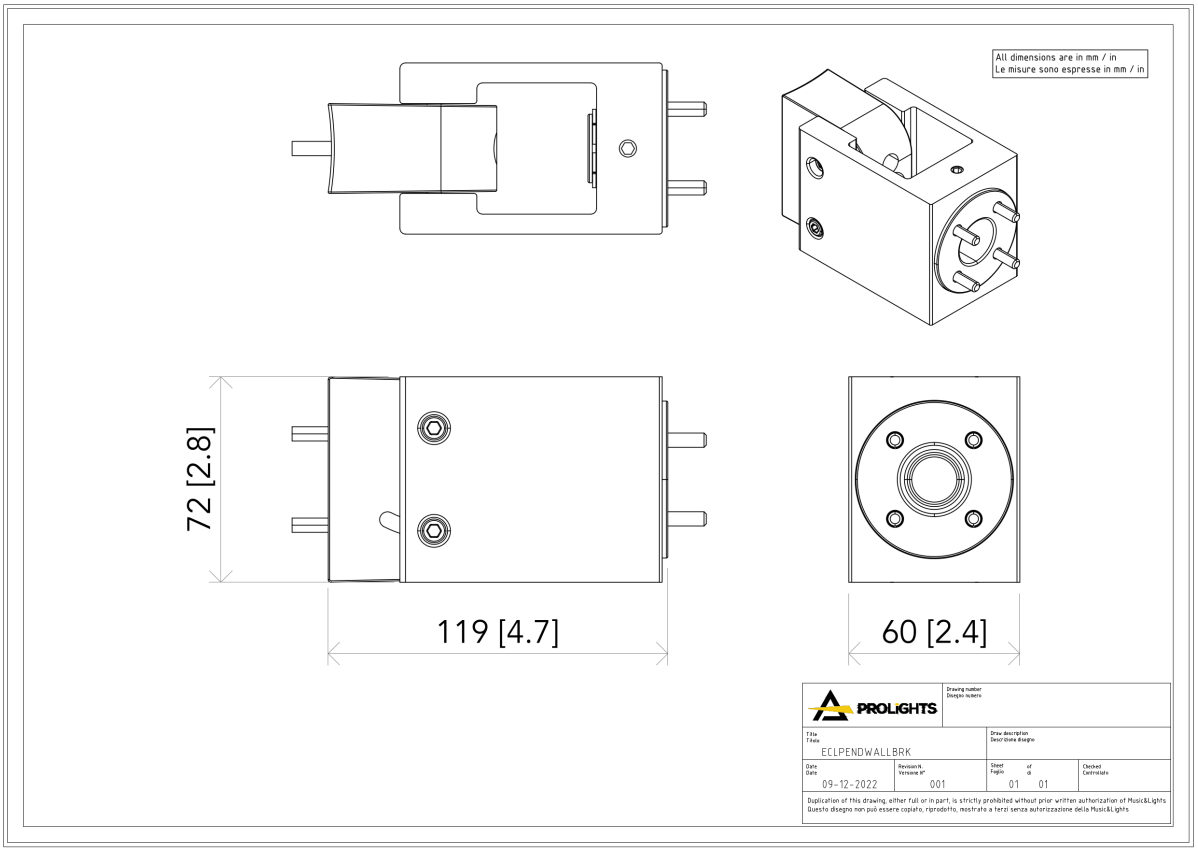

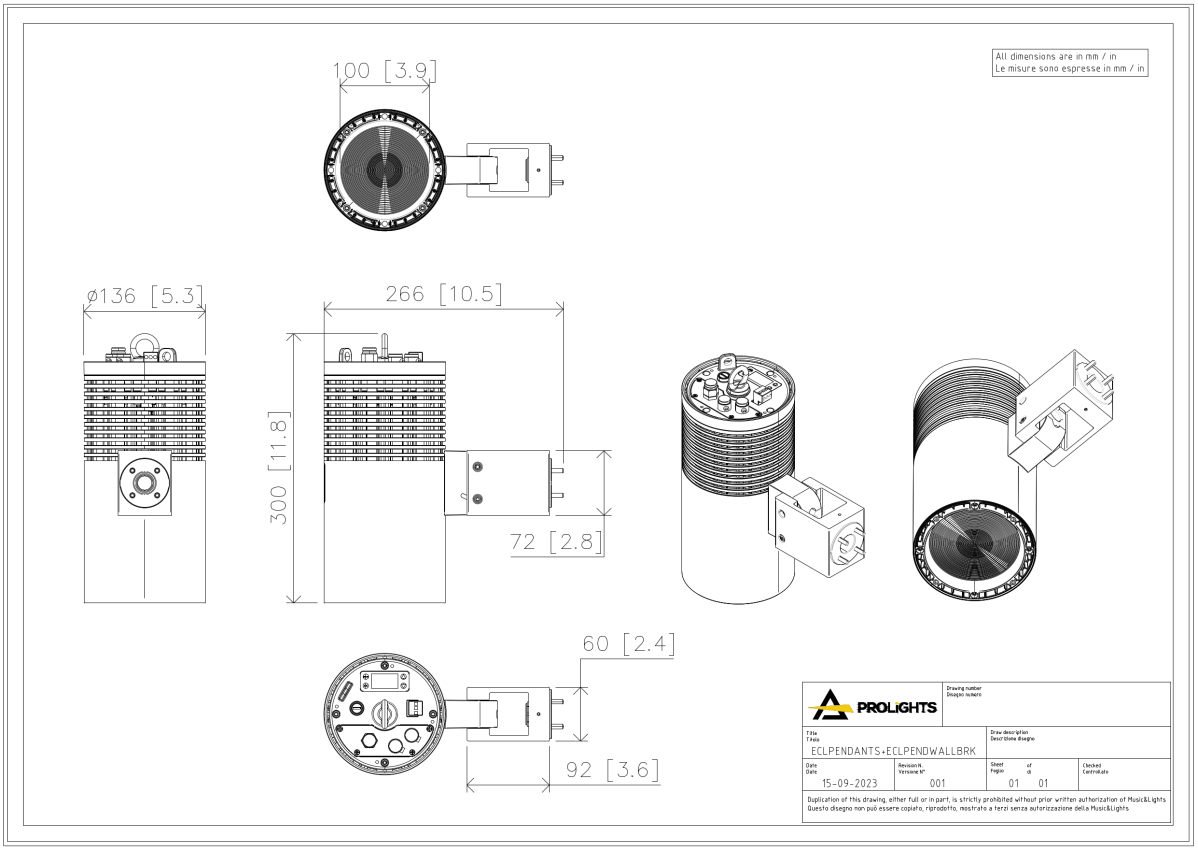

MUSIC & LIGHTS S.r.l.
Via A. Olivetti, snc
04026 - Minturno (LT) ITALY
info@prolights.it
Tel: +39 0771 72190
prolights.it
VAT No. IT 02057590594

Downloaded on 27/11/2026 - data may be provisional: features, specifications and appearance are subject to change without notice