EclSoft Tube100

ORDER CODE: **ECLSOFTTUBE100**



SOURCE
48W RGB + Warm White LEDs

IP RATING
IP65 for temporary outdoor use

WEIGHT
2,4kg / 5.29lbs

CRI
93

TECHNICAL SPECIFICATIONS

LIGHT SOURCE

Source:	48W RGB + Warm White LEDs
Luminous flux:	2'386 @Full
Lux:	71lx @3 m
Lux:	161lx @2 m
CRI:	93
R9:	92
TLCI:	91
TM30 Rf:	91
TM30 Rg:	105
Source life expectancy:	> 50.000 h

OPTICS

Beam angle:	128°
Field angle:	199°
Lens type:	frosted acrylic tube

COLOUR SYSTEM

Colour control:	XY, CCT, RGBW, Gel, HSI, Source Emulation, Colour Macros, CTO on colours
CCT:	CCT control, + / - green correction, tungsten emulation
White presets:	2.800 K - 10.000K with 28 K resolution
Colour wheel:	virtual colour wheel with macros
Macros:	several pre-built pixel macros with adjustable speed

DYNAMIC EFFECTS

Control Resolution:	16-bit dimmer and color control
Pixel patterns:	pre-programmed pixel macros and cinema lighting effects
FX generator:	16 sections with adjustable foreground/background colour, index, speed, direction
Static mode:	selection of static colour
Manual mode:	manual adjustment of colour
Auto mode:	built-in programs with execution speed adjustment
Special features:	linear crossfade channel from any white to any colour; virtual CTO on colours

CONTROL

Supported Protocols:	Art-Net, sACN, CRMX+W-DMX, Kling-Net
DMX channels:	main personality 1 / 2 / 13 / 14 / 18 / 19 / 20 / 23 / 33 / 43ch
RDM:	for remote addressing and parameter configuration
Display:	Graphic User Interface
IR:	infrared sensor controlled by remote (included in the pack, not included in single unit)
Master/Slave:	for synchronised operation of more units linked in a chain

ELECTRONICS

Dimmer:	linear 0 - 100% electronic dimmer
Dimmer curves:	4 selectable dimming modes available
Strobe / shutter:	1 - 30 Hz, electronic
Selectable PWM:	3,000 to 24,000 Hz (selectable steps)
Firmware upgrade with:	via DMX with UPBOX1+EST100UPBOXI (not included)

Downloaded on 26/11/2026 - data may be provisional: features, specifications and appearance are subject to change without notice

TECHNICAL SPECIFICATIONS

BATTERY

Battery:	14,8V lithium
Estimated battery life:	up to 3 / 6 / 8 / 12 / 16 / 18 h (selectable)
Recharge connection:	DC with jack and AC with standard powercon connector
Recharge time:	5h (max)
Battery level indicator:	shown on display
Other:	Battery recharge in AC and DC, operation in main power with possibility to disable battery recharge throught software and charging operation in flightcase through external charger

PHYSICAL

IP rating:	IP65 for temporary outdoor use
Cooling:	fan-free with natural convection
Housing:	Sturdy polycarbonate body with die-cast aluminium parts
Finish:	black
Operating temperature:	Ta 0 to +45 °C (+32 to +113 °F)
Dimensions (WxHxD):	1163x50x50mm
Weight:	2,4kg

BOX CONTENT

1 x ECLSOFTTUBE100

1 x 1,5 meters power cable (BARE END - SEETRONIC IP65 power connector)

CONNECTIONS

Power connection:	DC connector for battery recharge and Seetronic powerCON TRUE IP65 IN
Wireless Connection:	integrated LumenRadio TiMo FX RDM - CRMX and W-DMX compatible
Data connection:	Seetronic RJ45 IP65 IN

ELECTRICAL

Mains power supply:	100-240V - 50/60Hz
Low Voltage DC mains:	24V
Max power consumption (230V):	34W
Power factor:	>0,96

INSTALLATION

Mounting points:	M5 threaded mounting points for eye bolts and brackets

CERTIFICATIONS / REPORTS

Compliance:	CE, RCM, FCC, cTUVus

Downloaded on 26/11/2026 - data may be provisional: features, specifications and appearance are subject to change without notice

ACCESSORIES & RELATED PRODUCTS



EST100OSPLUS
Clamp for ECLSOFTTUBE100



ENPTWCMAG
Fixing system with magnet for ECLNANOPANELTWC and ECLSOFTTUBE100



EST100MAGADP
M10 to M5 adapter to use ENPTWCMAG with ECLNANOPANELTWC and ECLSOFTTUBE100



EST100FY
Tripod for ECLNANOPANELTWC and ECLSOFTTUBE100



EST100EB
Eyebolt for ECLSOFTTUBE100



EST100BP
Baby Pin for ECLSOFTTUBE100

EST100WP
Wingplate for ECLSOFTTUBE100



EST100SPCR
Spacer for ECLSOFTTUBE100



EST100CP
Crossplate for ECLSOFTTUBE100



EST100POWER
Single charger for ECLSOFTTUBE100



EST100POWER8
8-way charger for ECLSOFTTUBE100



PRL-IRC
RGBWA IR controller, 29 buttons, manual/static colours, auto programs, fade



AETHERBOXONE
IP65 1x universe CRMX transceiver, DMX, Ethernet protocols, Wi-Fi, Bluetooth, battery-ready, POE



EST100UPBOXI
Interface for UPBOX1 and ECLSOFTTUBE100 for firmware upgrade and DMX control



IPTESTBOX
Portable vacuum and pressure tester for ProLights IP fixtures



UPBOXPRO
Firmware uploader kit, USB IN, 5-pin XLR DMX OUT connector

TECHNICAL DRAWINGS

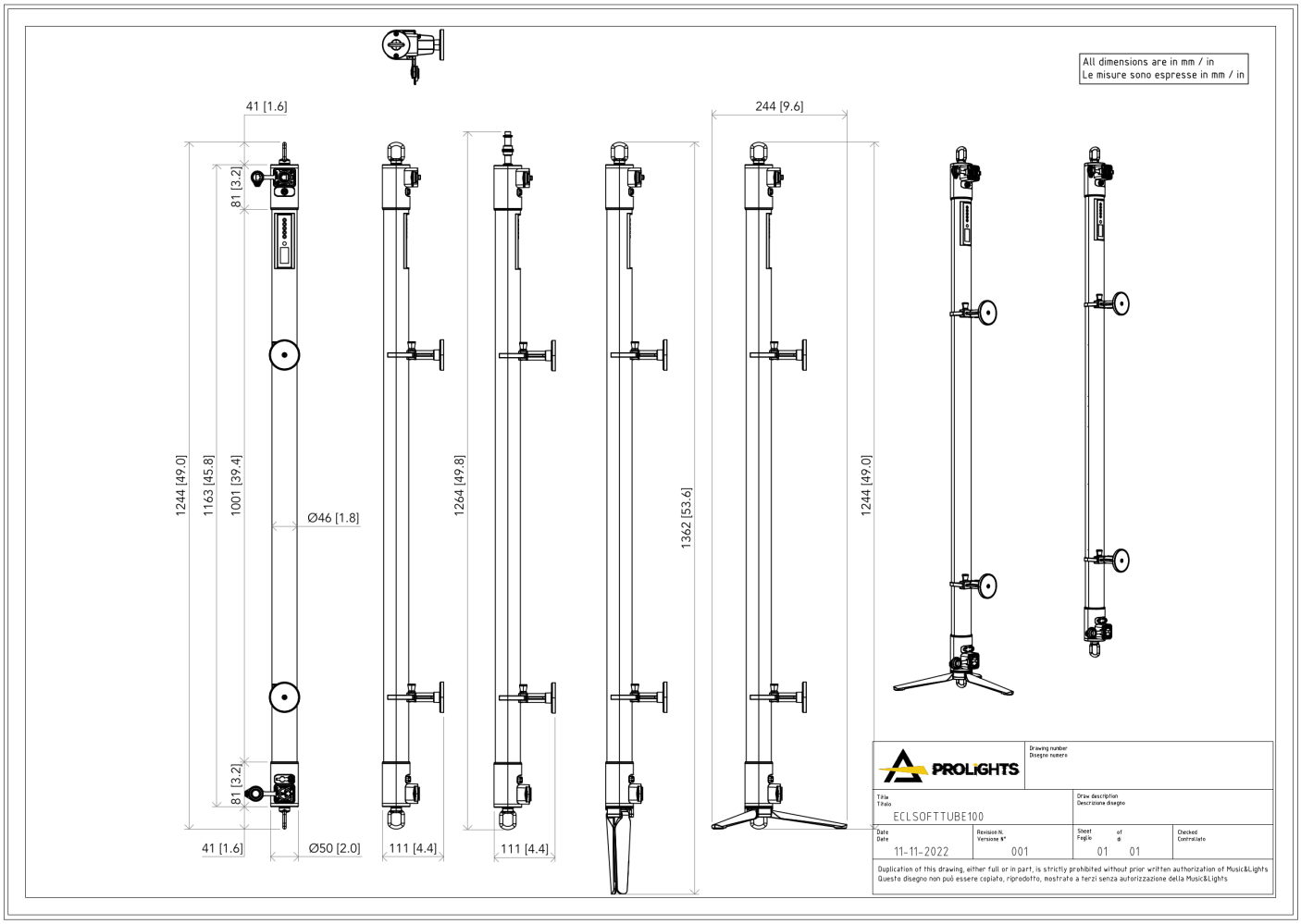

PHOTOMETRICS

Full On - Native

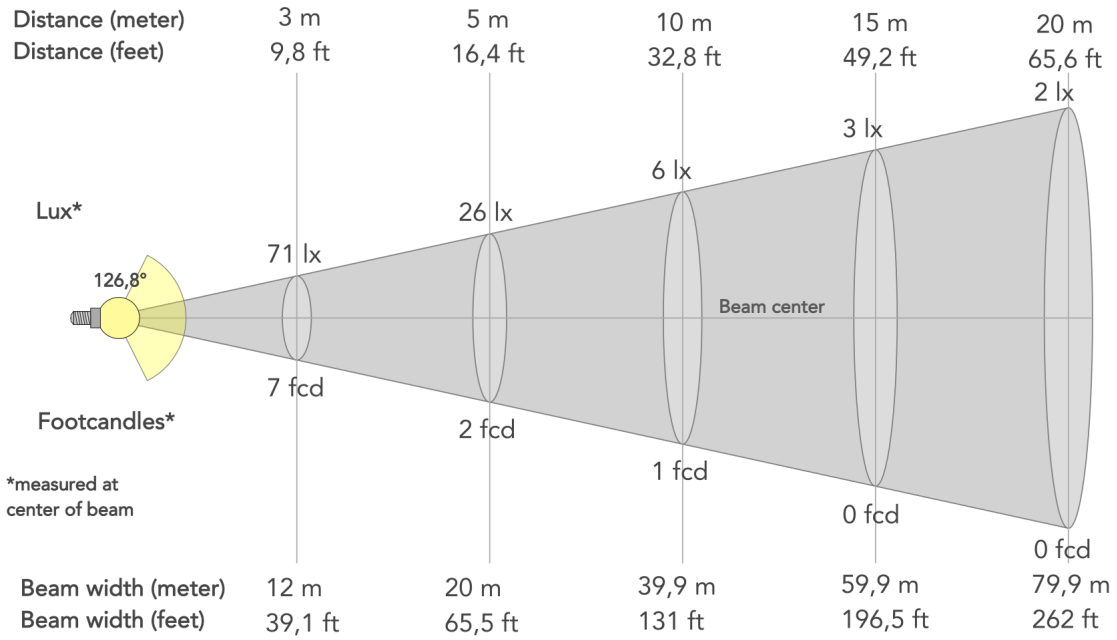

Beam angle (50%): **126.8°**	Field angle (10%): **194.6°**	Cut-off angle (2.5%): **225.1°**