Evo160f

ORDER CODE: **EVO160FDY**



VERSIONS

	Code	Col. Temperature
	**EVO160FDY**	**5600K**
	EVO160FTU	3100K

SOURCE
16x10W high-power white LED

ZOOM RANGE
13°~41° motorised linear zoom

IP RATING
IP20

WEIGHT
6,6kg / 14.55lbs

LUMINOUS FLUX (MAX)
5300 lm

CRI
TU >83Ra - DY >70

Downloaded on 29/11/2026 - data may be provisional: features, specifications and appearance are subject to change without notice

TECHNICAL SPECIFICATIONS

LIGHT SOURCE

Source:	16x10W high-power white LED
Source CCT:	TU 3100 K - DY 5600K
Luminous flux:	TU 5300lm - DY 6519
Lux:	(13°) TU 4670lux - DY 5730lx @3 m
CRI:	TU >83Ra - DY >70
Source life expectancy:	> 50.000 h

OPTICS

Zoom range:	13°~41° motorised linear zoom
Lens type:	high-quality glass lens optics

CONNECTIONS

Power connection:	Neutrik powerCON IN/OUT connectors
Signal connection:	Amphenol XLR 3p IN/OUT connectors

CONTROL

Supported Protocols:	DMX512
DMX channels:	1/2/5ch
Display:	LED display user interface

ELECTRONICS

Dimmer:	linear 0 - 100% electronic dimmer
Dimmer curves:	5 selectable dimming modes available
Strobe / shutter:	1-25 Hz, electronic

ELECTRICAL

Mains power supply:	100-240V - 50/60Hz
Max power consumption (230V):	180W
Output (at 230V):	10 units on a single power line

PHYSICAL

IP rating:	IP20
Cooling:	forced-air with low-noise fan
Housing:	Sturdy die-cast aluminium body
Finish:	black
Operating temperature:	Ta -10 to +45 °C (+14 to +113 °F)
Dimensions (WxHxD):	286x260x417mm
Weight:	6,6kg

INSTALLATION

Suspension and fixing:	bracket for hanging and floor positioning

Downloaded on 29/11/2026 - data may be provisional: features, specifications and appearance are subject to change without notice

TECHNICAL DRAWINGS

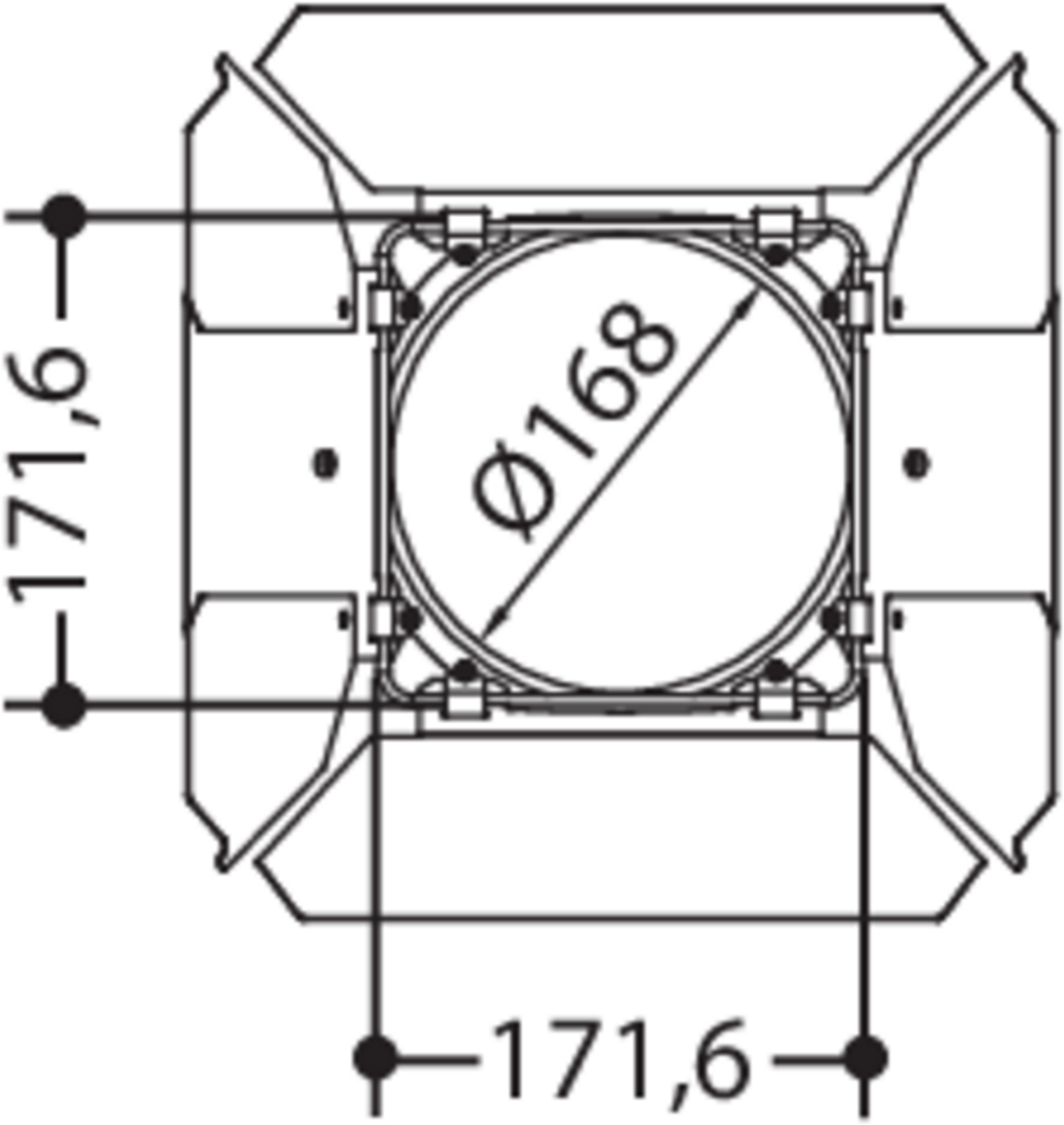

MUSIC & LIGHTS S.r.l.
Via A. Olivetti, snc
04026 - Minturno (LT) ITALY
info@prolights.it
Tel: +39 0771 72190
prolights.it
VAT No. IT 02057590594

Downloaded on 29/11/2026 - data may be provisional: features, specifications and appearance are subject to change without notice