Evo190e

ORDER CODE: **EVO190EDY**



VERSIONS

	Code	Col. Temperature
	**EVO190EDY**	**5600K**
	EVO190ETU	3100K

ACCESSORIES & RELATED PRODUCTS



EVO190LZ2550
Optional zoom optic for EVO profiler series, 25°-50°



EVO190L19
Optic for EVO190E profiler, 19° beam



EVO190L26
Optic for EVO190E profiler, 26° beam



EVO190L50
Optic for EVO190E profiler, 50° beam

Downloaded on 29/11/2026 - data may be provisional: features, specifications and appearance are subject to change without notice

TECHNICAL DRAWINGS

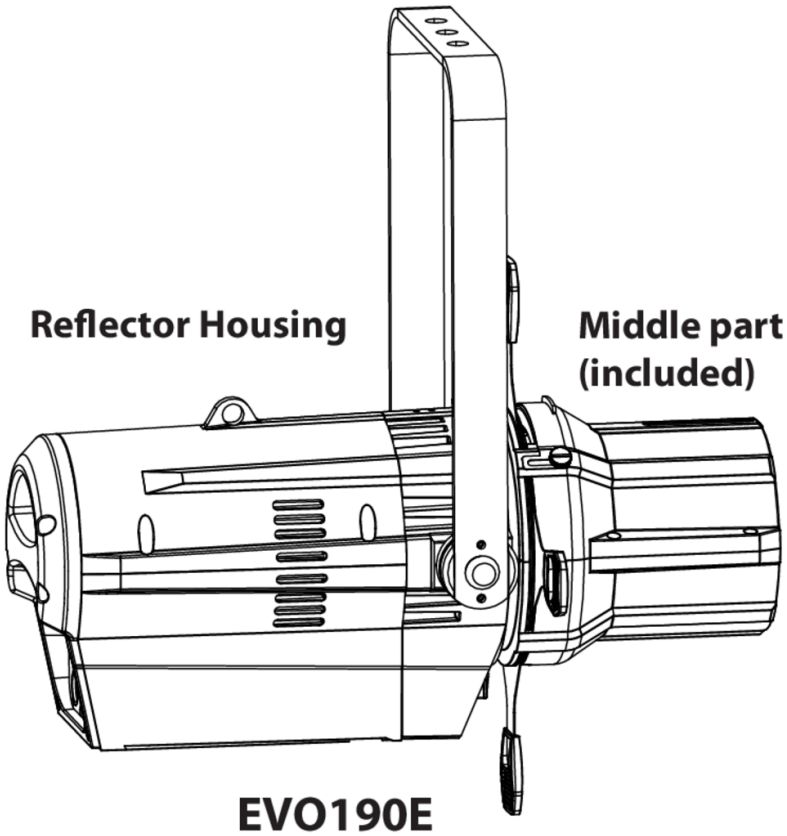

EVO190E
- EVO190ETU
- EVO190EDY

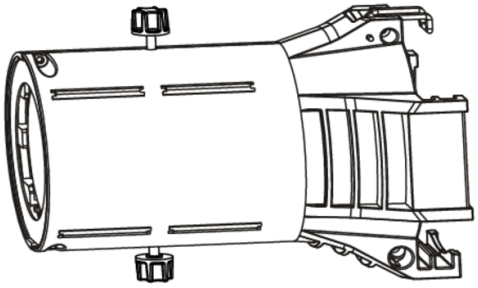

EVO190L
- EVO190L19
- EVO190L26
- EVO190L36
- EVO190L50

MUSIC & LIGHTS S.r.l. | Via A. Olivetti, snc 04026 - Minturno (LT) ITALY | info@prolights.it Tel: +39 0771 72190 | **prolights.it** VAT No. IT 02057590594

Downloaded on 29/11/2026 - data may be provisional: features, specifications and appearance are subject to change without notice