Evo190efc

ORDER CODE: **EVO190EFC**



SOURCE

Multichip 150W RGBW LED

ZOOM RANGE

optional 15°~30° or 25°~50° manual

IP RATING

IP20

WEIGHT

9,6kg / 21.16lbs

TECHNICAL SPECIFICATIONS

LIGHT SOURCE

Source:	Multichip 150W RGBW LED
Luminous flux:	3700
Lux:	4710lx @3 m full
Source life expectancy:	> 50.000 h

OPTICS

Zoom range:	optional 15°~30° or 25°~50° manual
Beam angle:	optional 19° / 26° / 36° / 50°
Lens type:	high-quality glass lens optics

COLOUR SYSTEM

CCT:	CCT control through dedicated DMX channel
White presets:	3200~9000K
Colour wheel:	virtual colour wheel with macros

DYNAMIC EFFECTS

Static mode:	selection of static colour
Manual mode:	manual adjustment of colour

CONTROL

Supported Protocols:	DMX512
DMX channels:	Theater 1/3/5ch - Tour 4/8/11ch
Display:	LCD display
Master/Slave:	for synchronised operation of more units linked in a chain

ELECTRONICS

Dimmer:	linear 0 - 100% electronic dimmer
Dimmer curves:	5 selectable dimming modes available
Firmware upgrade with:	via DMX with UPBOXPRO/ UPBOX1 (not included)

CONNECTIONS

Power connection:	Neutrik powerCON IN/OUT connectors
Signal connection:	Amphenol XLR 3p IN/OUT connectors

ELECTRICAL

Mains power supply:	100-240V - 50/60Hz
Max power consumption (230V):	180W
Output (at 230V):	8 units on a single power line

PHYSICAL

IP rating:	IP20
Cooling:	forced-air with low-noise fan
Housing:	Sturdy die-cast aluminium body
Finish:	black
Operating temperature:	Ta -20 to +45 °C (-4 to +113 °F)
Dimensions (WxHxD):	380x530x645mm
Weight:	9,6kg

INSTALLATION

Suspension and fixing:	bracket for hanging and floor positioning

ACCESSORIES & RELATED PRODUCTS



EVO190LZ2550
Optional zoom optic for EVO profiler series, 25°-50°



EVO190L19
Optic for EVO190E profiler, 19° beam



EVO190L26
Optic for EVO190E profiler, 26° beam



EVO190L50
Optic for EVO190E profiler, 50° beam

Downloaded on 29/11/2026 - data may be provisional: features, specifications and appearance are subject to change without notice

TECHNICAL DRAWINGS

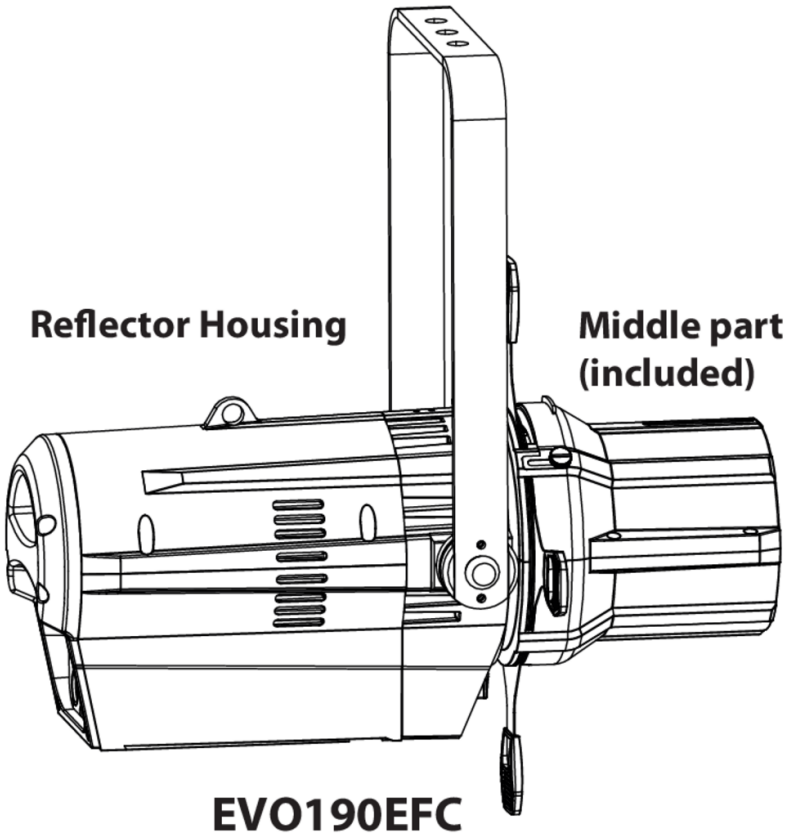

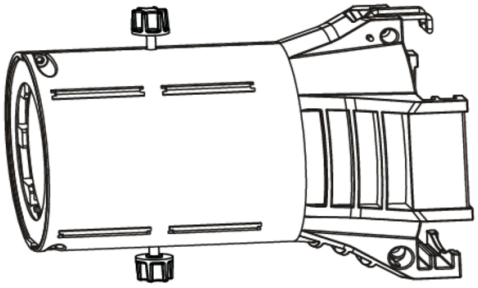

EVO190L

- EVO190L19
- EVO190L26
- EVO190L36
- EVO190L50

MUSIC & LIGHTS S.r.l.
Via A. Olivetti, snc
04026 - Minturno (LT) ITALY
info@prolights.it
Tel: +39 0771 72190
prolights.it
VAT No. IT 02057590594

Downloaded on 29/11/2026 - data may be provisional: features, specifications and appearance are subject to change without notice