# Fclair5fan

**ORDER CODE:** FCLAIR5FAN




## MAIN FEATURES

- Size (LxHxW): 1.223x567 (717 with wheels) x594 mm
- Weight: 53 kg
- Weight with 4 AIR5FAN: 117 kg

## TECHNICAL DRAWINGS

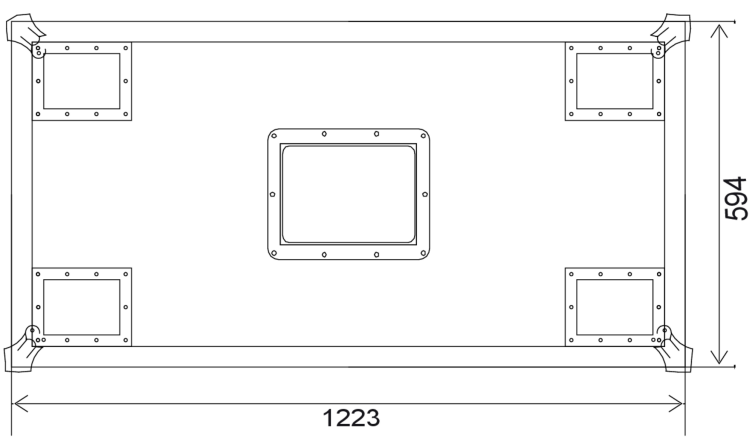


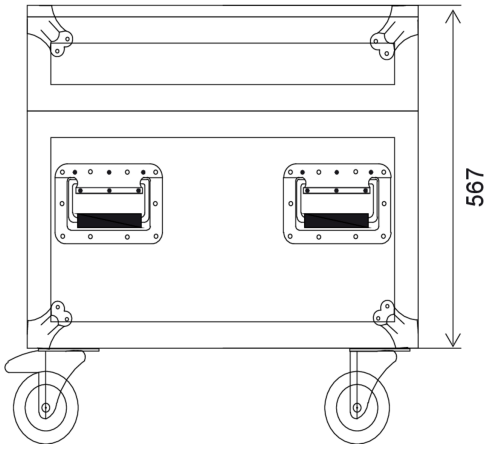


**MUSIC & LIGHTS** S.r.l.
Via A. Olivetti, snc
04026 - Minturno (LT) ITALY
info@prolights.it
Tel: +39 0771 72190
**prolights.it**
VAT No. IT 02057590594

Downloaded on 28/11/2026 - data may be provisional: features, specifications and appearance are subject to change without notice