Fclastrah330iptl

ORDER CODE: FCLASTRAH330IPTL



MAIN FEATURES

- Size (LxHxW): 786 X 921 (788 without wheels) X 583 mm
- Weight: 46,5 kg
- Weight with 2 ASTRAHYB330: 96,5 kg

Downloaded on 28/11/2026 - data may be provisional: features, specifications and appearance are subject to change without notice

TECHNICAL DRAWINGS

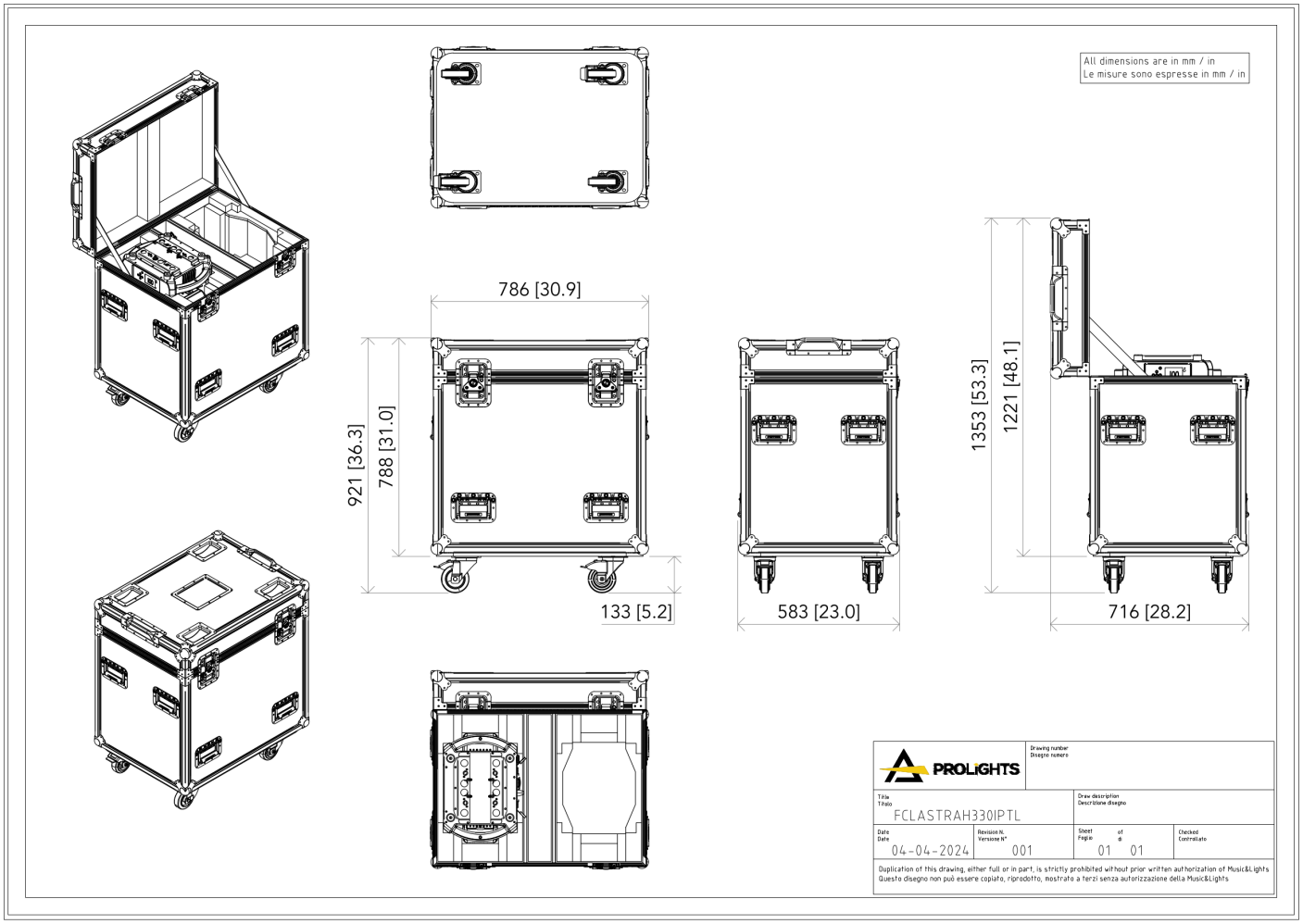

MUSIC & LIGHTS S.r.l. | Via A. Olivetti, snc 04026 - Minturno (LT) ITALY | info@prolights.it Tel: +39 0771 72190 | **prolights.it** VAT No. IT 02057590594

Downloaded on 28/11/2026 - data may be provisional: features, specifications and appearance are subject to change without notice