HaluPix Duo Pack

ORDER CODE: HALUPIXDUOPACK



IP RATING

IP65 for temporary outdoor use

WEIGHT

108kg / 238.1lbs

LUMINOUS FLUX (MAX)

11'388 lm

CRI

(beam layer) > 80 @2700K

Downloaded on 23/11/2026 - data may be provisional: features, specifications and appearance are subject to change without notice

TECHNICAL SPECIFICATIONS

LIGHT SOURCE

Luminous flux:	11'388 lm (total) @Full
Luminous flux:	7'391 lm (beam layer) | 12'555 lm (pixel layer) @Full
Lux:	(total) 23'686lx @5 m full
Lux:	(beam layer) 51'268 lx | (pixel layer) 173lx @5 m full
CRI:	(beam layer) > 80 @2700K; (pixel layer) 94 @3200K; 91,5 @5600K
R9:	(pixel layer) 94,8 @3200K; 95,8 @5600K
Source life expectancy:	> 30.000 h

OPTICS

Beam angle:	(beam layer) 3,6°; (pixel layer) 116°
Field angle:	(beam layer) 6,8°; (pixel layer) 155°
Pixel pitch:	(BEAMs) 72 mm | (PIXELs) 24mm
Additional optics:	available optional optics for beam LEDs 12°, 24°

COLOUR SYSTEM

Colour wheel:	virtual colour wheel with macros
Macros:	several pre-built pixel macros with adjustable speed

DYNAMIC EFFECTS

Control Resolution:	16-bit dimmer and color control
Pixel patterns:	pre-programmed static and dynamic pixel patterns
FX generator:	adjustable foreground/background colour, index, speed, direction
Static mode:	selection of static dimmer, colors and color temperature

CONTROL

Supported Protocols:	DMX512, RDM, ArtNet, RDMnet, sACN (IGMP v2), CRMX (optional)
DMX channels:	from 12 channels to 1855ch modular and user-customizable DMX architecture (MCA)
Pixel control:	pixel2pixel control
RDM:	for remote addressing and parameter configuration
Display:	Graphic User Interface
Master/Slave:	for synchronised operation of more units linked in a chain

ELECTRONICS

Dimmer:	linear 0 - 100% electronic dimmer
Dimmer curves:	up to 6 independent selectable dimmer curves per source
Strobe / shutter:	1 - 30 Hz, electronic
Selectable PWM:	600 to 25,000 Hz (selectable steps)
Firmware upgrade with:	via DMX with UPBOXPRO (not included) or via Ethernet with DMX-Workshop

CONNECTIONS

Power connection:	Seetronic powerCON waterproof IN/OUT connectors
Signal connection:	IP65 Seetronic XLR 5p IN/OUT connectors
Wireless Connection:	optional LumenRadio TiMo FX RDM - CRMX and W-DMX compatible
Data connection:	Seetronic Ethernet IP in/out connectors
EtherFlow:	Ethernet pass-through switch that preserves network connectivity even when the fixture is unpowered

Downloaded on 23/11/2026 - data may be provisional: features, specifications and appearance are subject to change without notice

TECHNICAL SPECIFICATIONS

ELECTRICAL

Mains power supply:	100-240V - 50/60Hz
Max power consumption (230V):	500W
Output (at 230V):	4 units on a single power line
Output (at 120V):	2 units on a single power line
Standby power:	14,8 W
Power factor:	> 0,94

PHYSICAL

IP rating:	IP65 for temporary outdoor use
Cooling:	fan-free with natural convection
Housing:	Weatherproof IP65 construction with magnesium alloy
Finish:	black
Operating temperature:	Ta -20 to +45 °C (-4 to +113 °F)
Dimensions (WxHxD):	500x500x133mm
Weight:	108kg

INSTALLATION

Suspension and fixing:	spigot for tripod use, bracket for truss rigging and hardware for connection of more units
Bracket system:	spigot for tripod use and bracket for truss rigging
Hardware on-board:	on board mechanics for modular assembly of multiple fixtures
Curve configurations:	-10° to +15° with onboard mechanics - back accessories for ground applications compatible with KAPPAX Ledwall (refer to the user manual for details)

CERTIFICATIONS / REPORTS

Compliance:	CE, RCM, FCC, cTUVus

Downloaded on 23/11/2026 - data may be provisional: features, specifications and appearance are subject to change without notice

ACCESSORIES & RELATED PRODUCTS



FCLHALUPIXDUO
Flight case for 4 pcs HALUPIXDUO



HDL12
Optional Beam Lenses 12° for HALUPIXDUO and HALUSTRIPDUO

HDL24
Optional Beam Lenses 24° for HALUPIXDUO and HALUSTRIPDUO



OS25PLUS
Quick-lock omega bracket, M12 hole



OS25H3PLUS
Quick-lock omega bracket, 6 cm height, M12 hole



HDWK
Wireless kit, compatible with multiple Prolights products



ECLFRSPG
Spigot for PROLIGHTS fixtures



VBSPG
Spigot for HALUPIXDUO



VBJMPF
Metal joint used to connect 4 pcs HALUPIXDUO cabinets in flat configuration, M10 hole



VBJMPC
Metal joint used to connect 4 pcs HALUPIXDUO cabinets in curve configuration, M10 hole



VBHGB01
Fly bar / ground bar for HALUPIXDUO, 1 column



VBHGB02
Fly bar / ground bar for HALUPIXDUO, 2 column



KSXCJB
Ground system back horizontal support for SIGMAX and KAPPAX series LED wall



KSXSPC
Ground structure spacer for HALUPIXDUO



KSXBS21
2in1 back support for SIGMAX and KAPPAX series LED wall for ground system fixing



KSXBS31
3in1 back support for SIGMAX and KAPPAX series LED wall for ground system fixing



KSXBSC
Back plate for SIGMAX and KAPPAX series LED wall for ground system fixing



KSXGHR
Ground system back horizontal reinforcement for SIGMAX & KAPPAX series LED wall



OXFCIS150
Rigging/ground-stack structure flightcase for all LEDScreen series, 150cm



IPTESTBOX
Portable vacuum and pressure tester for ProLights IP fixtures



AETHERBOXONE
IP65 1x universe CRMX transceiver, DMX, Ethernet protocols, Wi-Fi, Bluetooth, battery-ready, POE



UPBOXPRO
Firmware uploader kit, USB IN, 5-pin XLR DMX OUT connector

Downloaded on 23/11/2026 - data may be provisional: features, specifications and appearance are subject to change without notice

TECHNICAL DRAWINGS

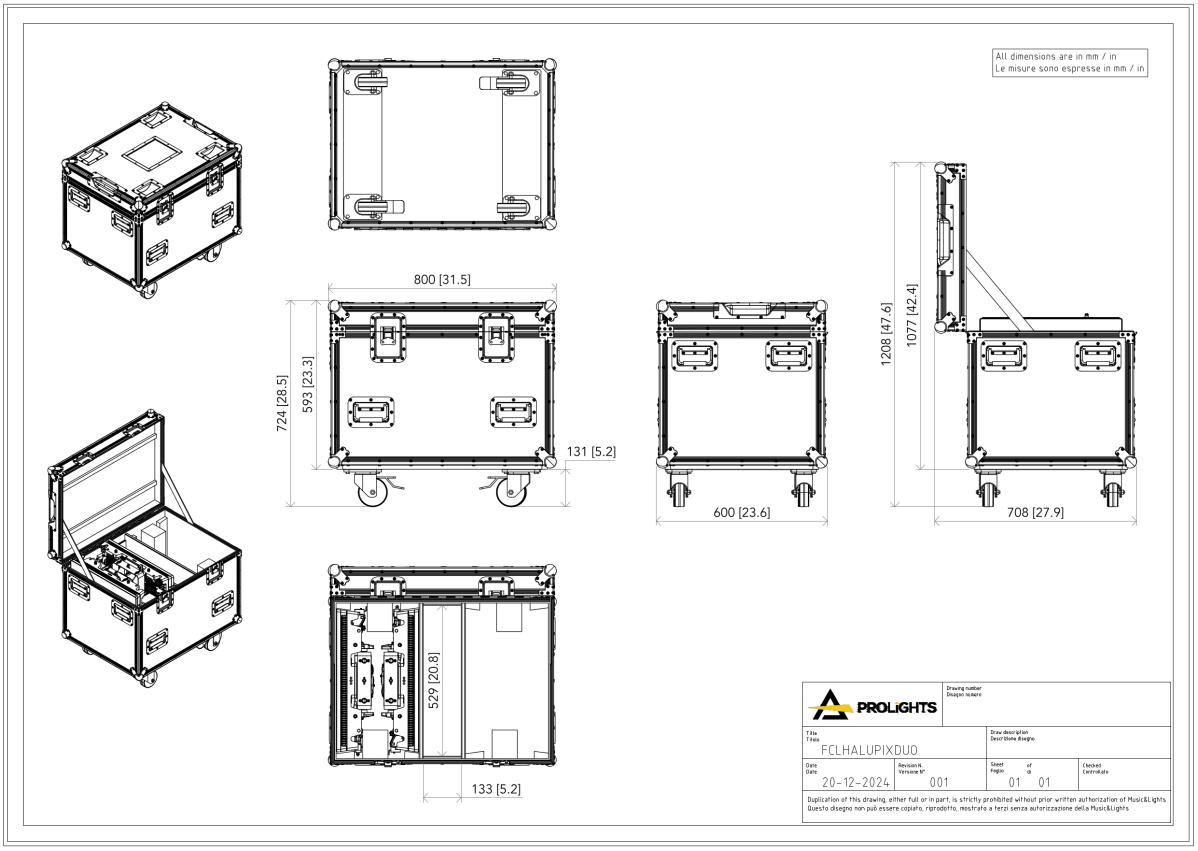

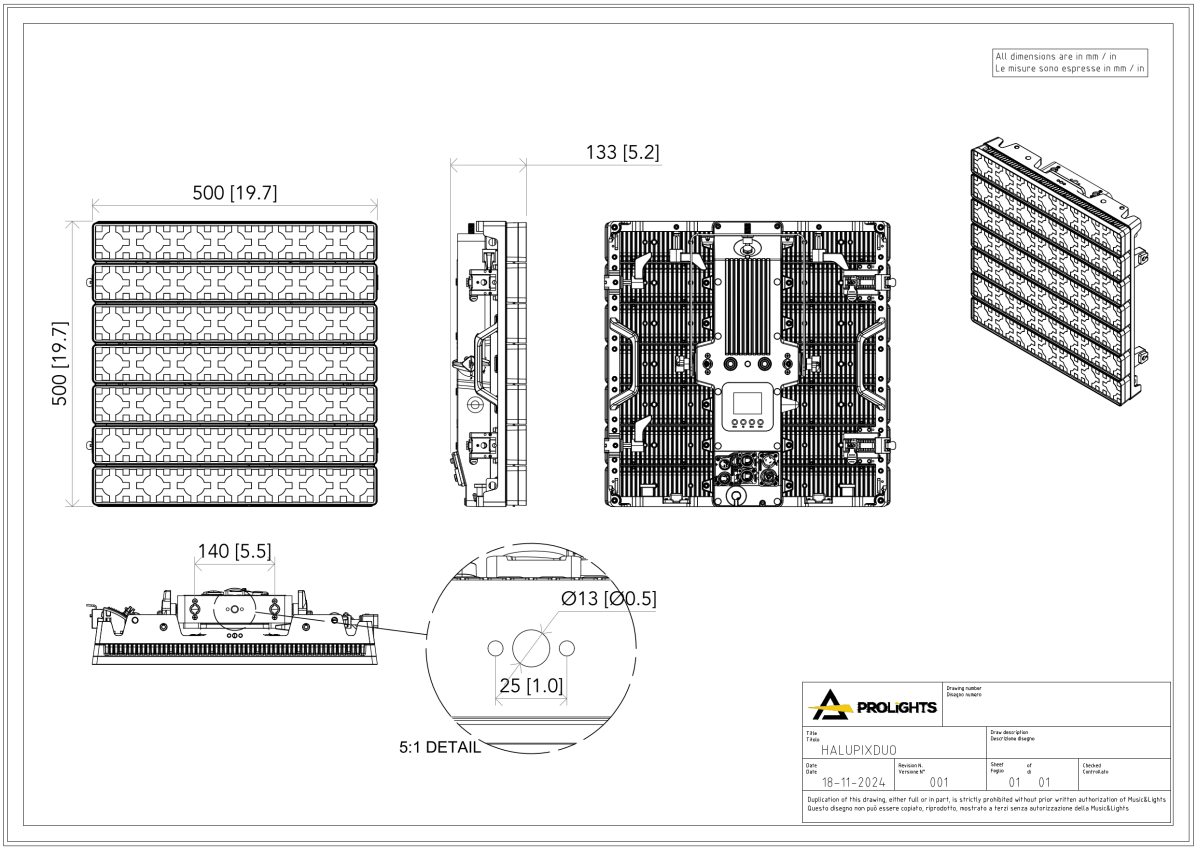

Downloaded on 23/11/2026 - data may be provisional: features, specifications and appearance are subject to change without notice

PHOTOMETRICS

Full On - Total (Beam + Pixel Layers)

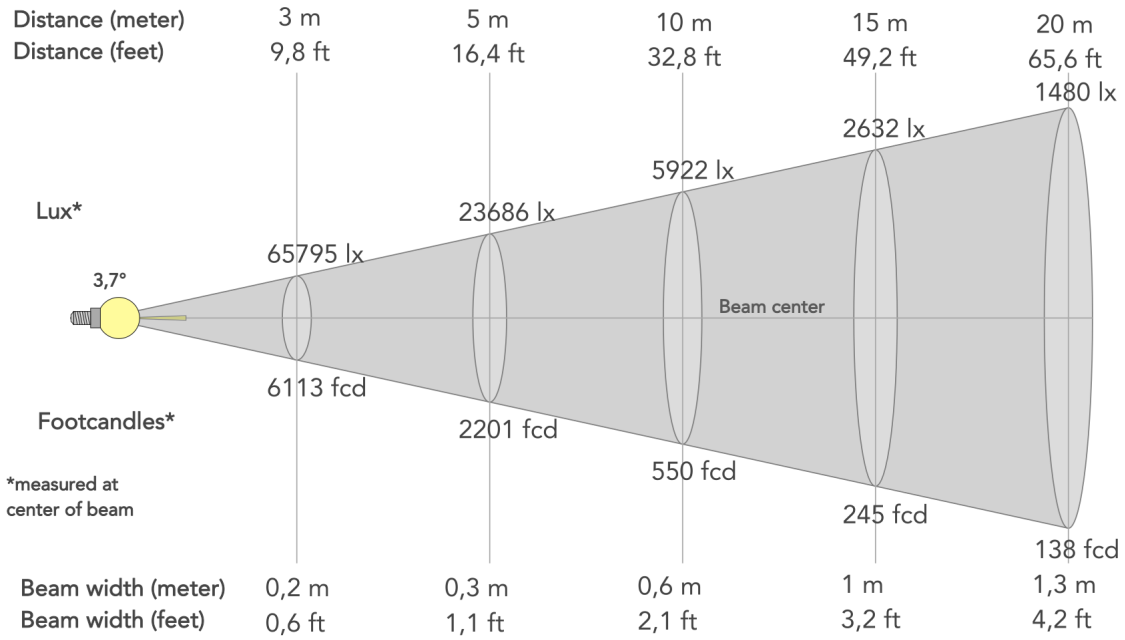

Beam angle (50%): **3.7°**	Field angle (10%): **6.9°**	Cut-off angle (2.5%): **9.2°**

MUSIC & LIGHTS S.r.l. | Via A. Olivetti, snc
04026 - Minturno (LT) ITALY | info@prolights.it
Tel: +39 0771 72190 | **prolights.it**
VAT No. IT 02057590594

Downloaded on 23/11/2026 - data may be provisional: features, specifications and appearance are subject to change without notice