Jade

ORDER CODE: JADE



SOURCE

280W S Osram Sirius HRI

ZOOM RANGE

beam: 2° - 10° / spot: 5,5° - 23° motorised linear zoom

IP RATING

IP20

WEIGHT

17kg / 37.48lbs

TECHNICAL SPECIFICATIONS

LIGHT SOURCE

Source:	280W S Osram Sirius HRI
Source CCT:	7.800K
Luminous flux:	8'866
Lux:	(1.5°) 288'031lx @5 m full
Lux:	(4.5°) 42'264lx @5 m
Source life expectancy:	2.000 h

OPTICS

Zoom range:	beam: 2° - 10° / spot: 5,5° - 23° motorised linear zoom
Lens diameter:	117mm
Lens type:	high-quality glass lens optics
Additional optics:	heat filter to switch from beam to spot modes
Focus:	motorised with auto-focus

COLOUR SYSTEM

CCT:	on wheel 2.500 K and 3.200 K + CTB
Colour wheel:	13 colour filters + open

DYNAMIC EFFECTS

Circular prism:	8-f with bi-directional rotation, indexing
Linear prism:	6-f with bi-directional rotation, indexing
Frost:	to soften the beam edge

GOBOS

Gobo wheel 1:	9 rotating gobos + open, interchangeable
Gobo size:	outer: 15,7 mm - image: 12 mm - thickness: 1,1 mm
Fixed gobos:	14 fixed gobos + open

CONTROL

Supported Protocols:	DMX512, RDM, W-DMX
DMX channels:	14 / 16 / 22 / 23ch
RDM:	for remote addressing and parameter configuration
Display:	LCD high resolution colour display
Hibernation:	power safe mode when lost DMX

MOVEMENT

Pan:	630° - 540° - 8/16-bit resolution
Tilt:	265° - 8/16-bit resolution
Position feedback:	automatic repositioning after external movement

ELECTRONICS

Dimmer:	linear 0 - 100% mechanical dimmer
Strobe / shutter:	1 - 25 flash(s), mechanical
Display battery:	included, self-charging battery backup
Firmware upgrade with:	via DMX with UPBOXPRO/ UPBOX2 (not included)

CONNECTIONS

Power connection:	Neutrik powerCON TRUE1 IN connector
Signal connection:	Amphenol XLR 3p + 5p IN/OUT connectors
Wireless Connection:	integrated W-DMX receiver

ELECTRICAL

Mains power supply:	100-240V - 50/60Hz
Max power consumption (230V):	423W
Max power consumption (120V):	423W
Standby power:	53.3W
Power factor:	0,99

Downloaded on 26/11/2026 - data may be provisional: features, specifications and appearance are subject to change without notice

TECHNICAL SPECIFICATIONS

PHYSICAL

IP rating:	IP20
Cooling:	forced-air with low-noise fan
Housing:	Aluminium structure with high-resistance polycarbonate cover
Finish:	black
Operating temperature:	Ta -10 to +45 °C (+14 to +113 °F)
Dimensions (WxHxD):	355x619x235mm
Weight:	17kg

BOX CONTENT

1 x JADE

1 x 1,5 meters 3G1,5mmq power cable (BARE END - NEUTRIK POWERCON TRUE1 IP65 power connector)

2 x OS24PLUS

INSTALLATION

Suspension and fixing:	any position with quick-lock Omega brackets

CERTIFICATIONS / REPORTS

Compliance:	CE, UKCA, RCM

ACCESSORIES & RELATED PRODUCTS



OS24PLUS
Quick-lock omega bracket, M12 hole



AETHERBOXONE
IP65 1x universe CRMX transceiver, DMX, Ethernet protocols, Wi-Fi, Bluetooth, battery-ready, POE



UPBOXPRO
Firmware uploader kit, USB IN, 5-pin XLR DMX OUT connector

Downloaded on 26/11/2026 - data may be provisional: features, specifications and appearance are subject to change without notice

TECHNICAL DRAWINGS

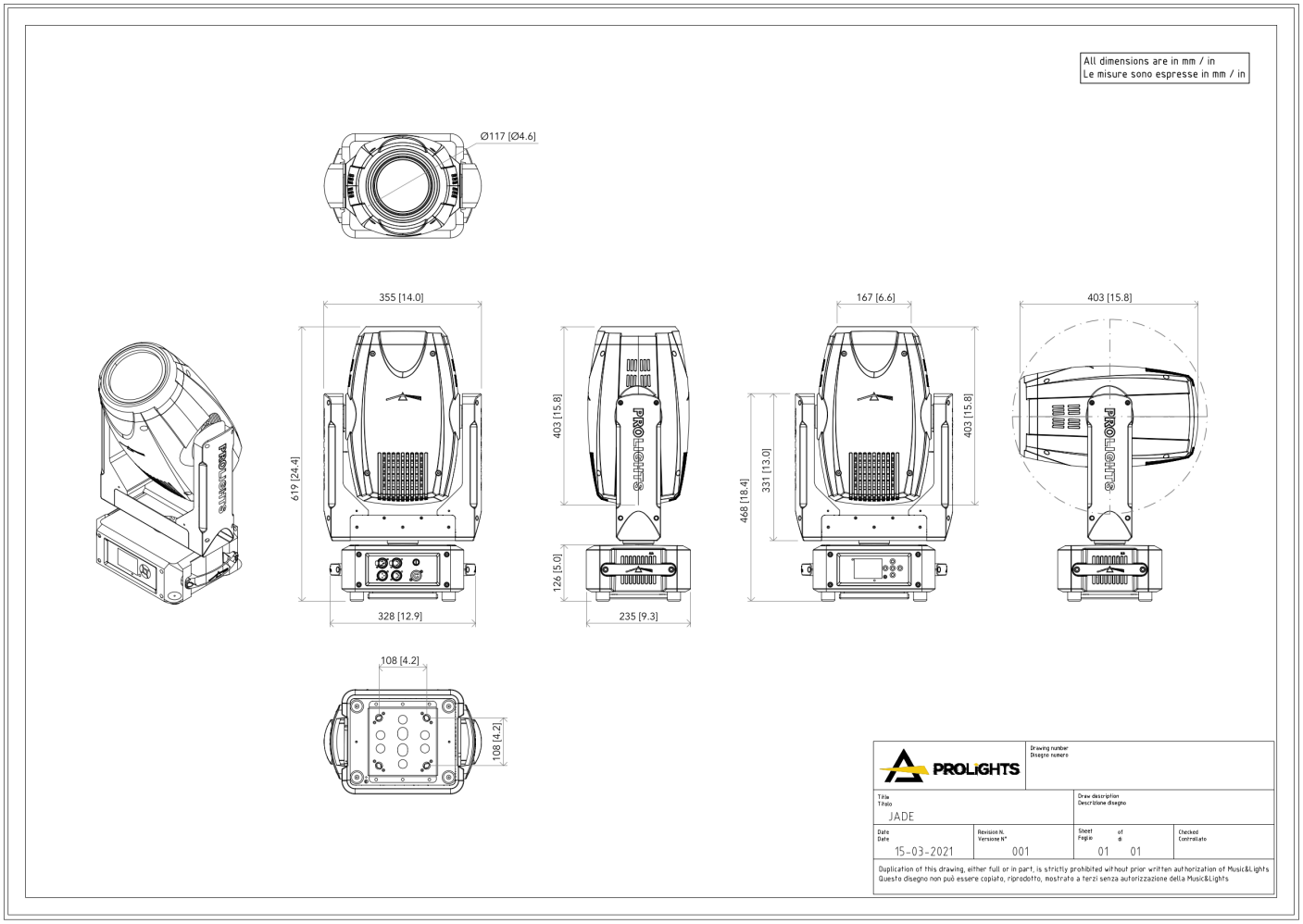

Downloaded on 26/11/2026 - data may be provisional: features, specifications and appearance are subject to change without notice

PHOTOMETRICS

Full On - Min Zoom

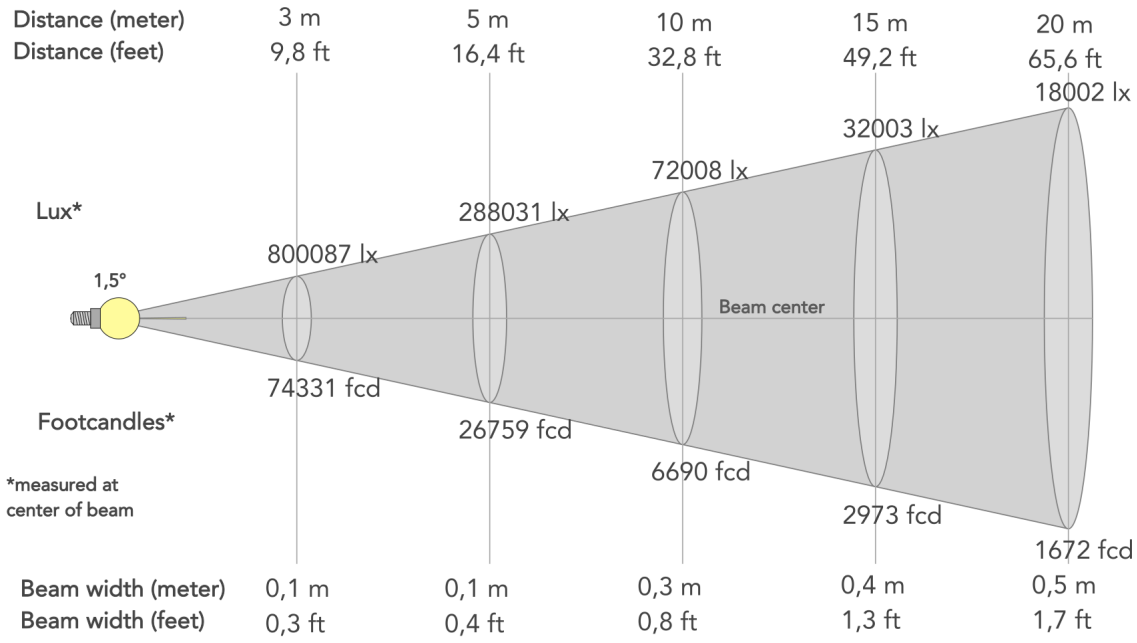

Beam angle (50%): **1.5°**	Field angle (10%): **2.7°**	Cut-off angle (2.5%): **3.1°**

Full On - Max Zoom

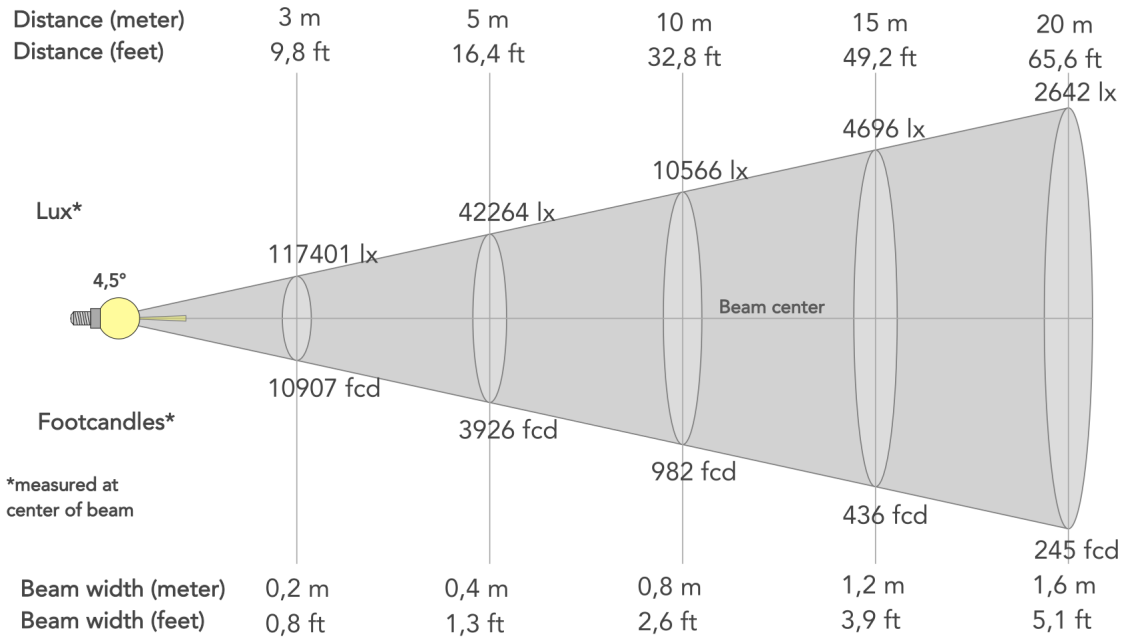

Beam angle (50%): **4.5°**	Field angle (10%): **9.5°**	Cut-off angle (2.5%): **11.5°**

MUSIC & LIGHTS S.r.l. | Via A. Olivetti, snc
04026 - Minturno (LT) ITALY | info@prolights.it
Tel: +39 0771 72190 | **prolights.it**
VAT No. IT 02057590594

Downloaded on 26/11/2026 - data may be provisional: features, specifications and appearance are subject to change without notice