Jet Hybrid200

ORDER CODE: JETHYB200



SOURCE	ZOOM RANGE	IP RATING
200W high-power white LED	**3,5° - 40° motorised linear zoom**	**IP20**

WEIGHT	LUMINOUS FLUX (MAX)
15kg / 33.07lbs	**5'962 lm**

Downloaded on 26/11/2026 - data may be provisional: features, specifications and appearance are subject to change without notice

TECHNICAL SPECIFICATIONS

LIGHT SOURCE

Source:	200W high-power white LED
Source CCT:	7.000K
Luminous flux:	(3,5°) 5'962 lm - (40°) 7'593
Lux:	(3,5°) 69'503 lx - (40°) 1'461lx @5 m full
CRI:	> 70 (CCT 6000K and CRI > 84 with filter on color wheel)
Source life expectancy:	> 50.000 hrs (L70B10 @Ta 25° C / 77° F)

OPTICS

Zoom range:	3,5° - 40° motorised linear zoom
Lens diameter:	100mm
Lens type:	HD anti-reflection lenses with achromatic coating
Focus:	motorised 16-bit

COLOUR SYSTEM

CCT:	on wheel 3.200 K
Colour wheel:	High CRI+10 colour filters + open

DYNAMIC EFFECTS

Control Resolution:	16-bit dimmer control
Circular prism:	5-f with bi-directional rotation, indexing
Frost:	linear 0-100% light interchangeable

GOBOS

Gobo wheel 1:	8 rotating gobos + open, interchangeable, indexing
Gobo size:	outer: 13,9 mm - image: 11 mm - thickness: up to 3 mm
Fixed gobos:	17 fixed gobos + open

CONTROL

Supported Protocols:	DMX512, RDM
DMX channels:	20ch
RDM:	for remote addressing and parameter configuration
Display:	LCD high resolution colour display with autoflip

MOVEMENT

Pan:	540° - 16-bit resolution
Tilt:	260° - 16-bit resolution
Position feedback:	automatic repositioning after external movement
Pan / tilt lock:	for transport and maintenance

ELECTRONICS

Dimmer:	linear 0 - 100% electronic dimmer
Dimmer curves:	4 selectable dimming modes available
Strobe / shutter:	1 - 30 Hz, electronic
Display battery:	included, self-charging battery backup
Selectable PWM:	600 to 50,000 Hz (selectable steps)
Firmware upgrade with:	via DMX with UPBOXPRO/ UPBOX2 (not included) or via USB pen drive

CONNECTIONS

Power connection:	Seetronic powerCON TRUE IP65 IN/OUT
Signal connection:	Neutrik IP XLR 5p IN/OUT connectors

INSTALLATION

Suspension and fixing:	any position with quick-lock Omega brackets
Mounting points:	quick-lock Omega sockets

Downloaded on 26/11/2026 - data may be provisional: features, specifications and appearance are subject to change without notice

TECHNICAL SPECIFICATIONS

ELECTRICAL

Mains power supply:	100-240V - 50/60Hz (max absolutes range: 90-264V - 50/60Hz)
Max power consumption (230V):	276W
Output (at 230V):	9 units on a single power line
Standby power:	56W
Power factor:	> 0,94

PHYSICAL

IP rating:	IP20
Cooling:	heat pipe with low-noise fan
Housing:	Aluminium structure with high-resistance polycarbonate cover
Finish:	black (RAL 9004)
Operating temperature:	Ta -10 to +45 °C (+14 to +113 °F)
Dimensions (WxHxD):	356x538x205mm
Weight:	15kg

CERTIFICATIONS / REPORTS

Compliance:	CE, RCM, FCC, cTUVus

BOX CONTENT

1 x JETHYB200

1 x OS24PLUS

1 x 1,5 meters 3G1,5mmq power cable (BARE END - SEETRONIC POWERCON TRUE1 IP65 power connector)

ACCESSORIES & RELATED PRODUCTS



FCLJETH200

Flight case for 4 pcs of JETHYB200 / JETSPOT120



JHYB200BAG1U

Empty ABS case for 1 pc of JETHYB200



JH200HF

Optional accessory heavy frost filter for JETHYB200



OS24PLUS

Quick-lock omega bracket, M12 hole



UPBOXPRO

Firmware uploader kit, USB IN, 5-pin XLR DMX OUT connector

TECHNICAL DRAWINGS

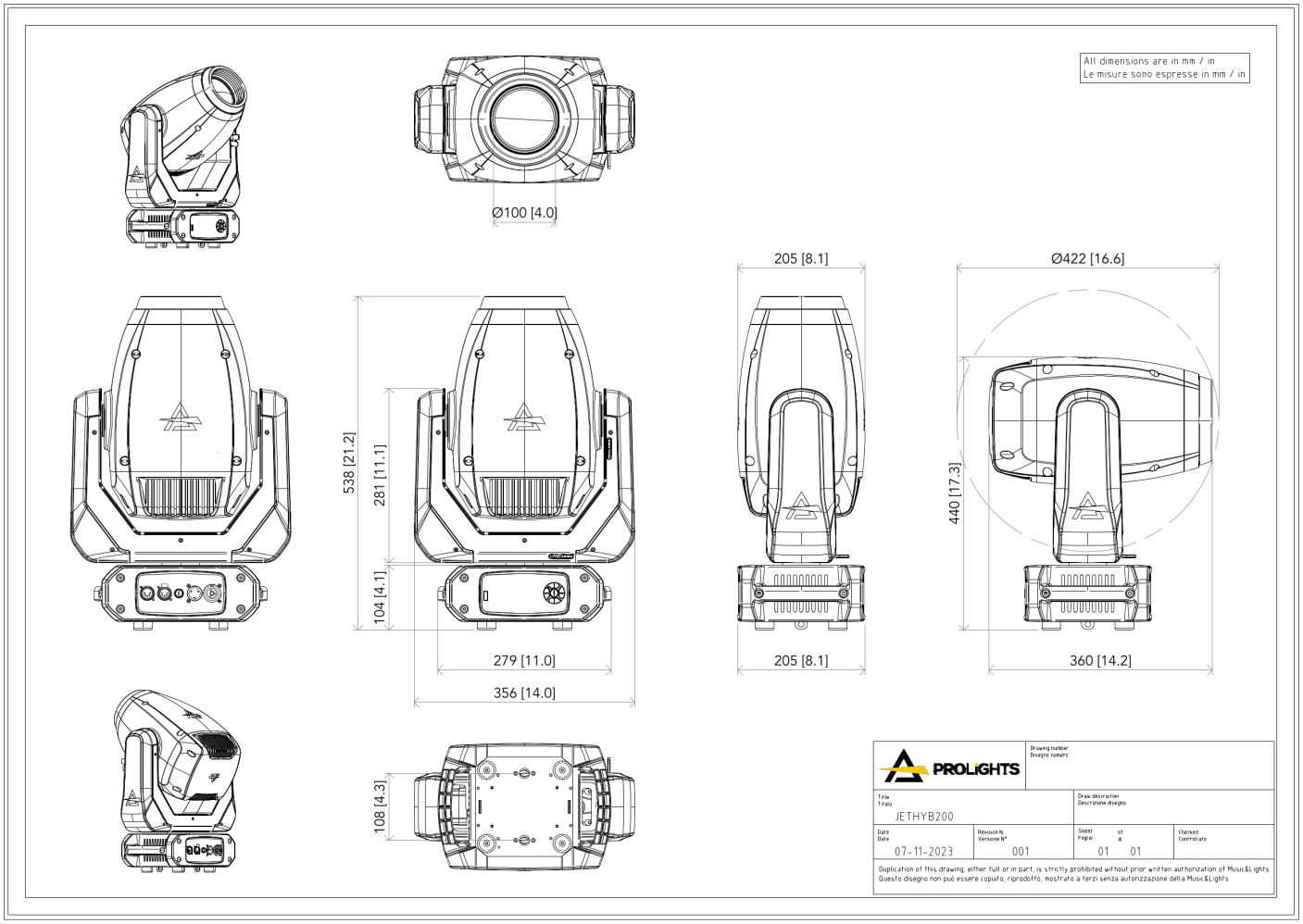

PHOTOMETRICS

Full On - Min Zoom

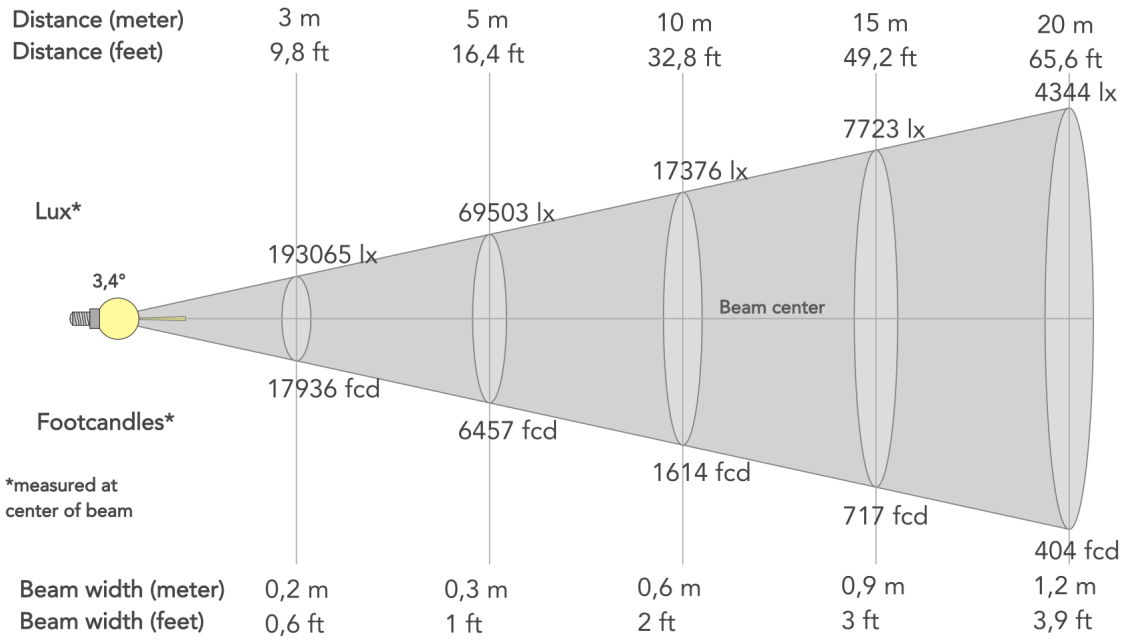

Beam angle (50%): **3.4°**	Field angle (10%): **4.7°**	Cut-off angle (2.5%): **5°**

Full On - Max Zoom

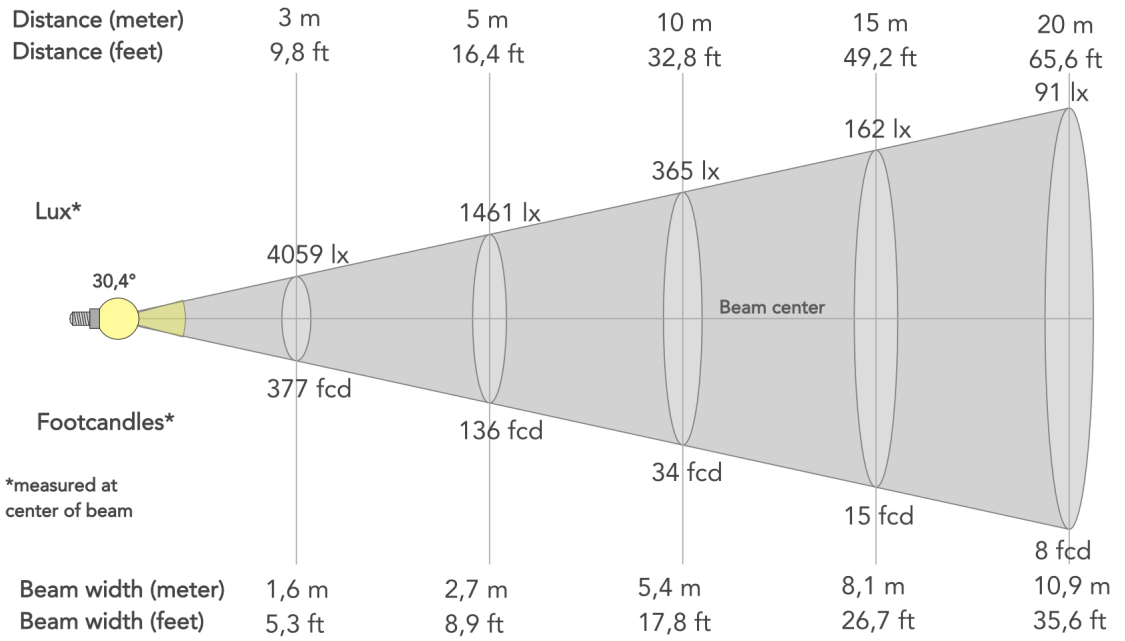

Beam angle (50%): **30.4°**	Field angle (10%): **38.1°**	Cut-off angle (2.5%): **39.9°**

MUSIC & LIGHTS S.r.l. | Via A. Olivetti, snc
04026 - Minturno (LT) ITALY | info@prolights.it
Tel: +39 0771 72190 | **prolights.it**
VAT No. IT 02057590594

Downloaded on 26/11/2026 - data may be provisional: features, specifications and appearance are subject to change without notice