Jet Profile300LT

ORDER CODE: **JETPROFILE300LT**



SOURCE	ZOOM RANGE	IP RATING
300W high-power white LED	**3,9° - 44,1° motorised linear zoom**	**IP20**

WEIGHT	LUMINOUS FLUX (MAX)
21,4kg / 47.18lbs	**12'065 lm**

Downloaded on 27/11/2026 - data may be provisional: features, specifications and appearance are subject to change without notice

TECHNICAL SPECIFICATIONS

LIGHT SOURCE

Source:	300W high-power white LED
Source CCT:	6500K
Luminous flux:	(3,9°) 8'313 lm - (44,1°) 12'065 lm
Lux:	(3,9°) 88'597 lx (44,1°) 1'333lx @5 m
CRI:	> 70 (85 with 6000K High CRI filter on color wheel)
Source life expectancy:	> 50.000 hrs (L70B10 @Ta 25° C / 77° F)

OPTICS

Zoom range:	3,9° - 44,1° motorised linear zoom
Lens diameter:	140mm
Lens type:	HD anti-reflection lenses with achromatic coating
Focus:	motorised 16-bit

COLOUR SYSTEM

Colour mixing:	CMY colour system on 3 gradually fading colour wheels
CCT:	linear CTO correction 2.800 K ~ 6.500 K
Colour wheel:	6 dichroic filters on 2 independent colour wheels

DYNAMIC EFFECTS

Control Resolution:	16-bit dimmer control
Shutter system:	4 shutter blades with position and ±30° angle adjustment, ±45° rotation of the complete framing system
Animation wheel:	animation wheel with CW and CCW rotation
FX generator:	prisms overlap for spectacular aerial effects
Circular prism:	4-f with bi-directional rotation, indexing, interchangeable
Linear prism:	4-f with bi-directional rotation, indexing, interchangeable
Frost:	linear 0-100% light interchangeable

GOBOS

Gobo wheel 1:	7 rotating gobos + open, interchangeable, indexing
Gobo size:	outer diameter: 20 mm; image diameter: 15 mm; thick: up to 3 mm

CONTROL

Supported Protocols:	DMX512, RDM, CRMX (optional)
DMX channels:	(STD) 38 / (EXT) 42ch
RDM:	for remote addressing and parameter configuration
Display:	Graphic User Interface

Downloaded on 27/11/2026 - data may be provisional: features, specifications and appearance are subject to change without notice

TECHNICAL SPECIFICATIONS

MOVEMENT

Pan:	540° - 16-bit resolution
Tilt:	260° - 16-bit resolution
Position feedback:	automatic repositioning after external movement
Pan / tilt lock:	for transport and maintenance

ELECTRONICS

Dimmer:	linear 0 - 100% electronic dimmer
Dimmer curves:	4 selectable dimming modes available
Strobe / shutter:	1 - 30 Hz, electronic
Display battery:	included, self-charging battery backup
Selectable PWM:	600 to 50,000 Hz (selectable steps)
Firmware upgrade with:	via DMX with UPBOXPRO/ UPBOX2 (not included) or via USB pen drive

CONNECTIONS

Power connection:	Seetronic powerCON TRUE IP65 IN/OUT
Signal connection:	Neutrik XLR 5p IN/OUT connectors
Wireless Connection:	optional LumenRadio TiMo FX RDM - CRMX and W-DMX compatible

ELECTRICAL

Mains power supply:	100-240V - 50/60Hz
Max power consumption (230V):	491W
Output (at 230V):	7 units on a single power line
Standby power:	85 W
Power factor:	> 0,96

PHYSICAL

IP rating:	IP20
Cooling:	heat pipe with low-noise fan
Housing:	Aluminium structure with high-resistance polycarbonate cover
Finish:	black
Operating temperature:	Ta -10 to +45 °C (+14 to +113 °F)
Dimensions (WxHxD):	403x640x250mm
Weight:	21,4kg

INSTALLATION

Suspension and fixing:	any position with quick-lock Omega brackets
Mounting points:	quick-lock Omega sockets

CERTIFICATIONS / REPORTS

Compliance:	CE, RCM, cTUVus

BOX CONTENT

1 x JETPROFILE300LT

2 x OS24PLUS

1 x 1,5 meters 3G1,5mmq power cable (BARE END - NEUTRIK POWERCON TRUE1 IP65 power connector)

Downloaded on 27/11/2026 - data may be provisional: features, specifications and appearance are subject to change without notice

ACCESSORIES & RELATED PRODUCTS



OS24PLUS

Quick-lock omega bracket, M12 hole



JP300LF

Included accessory light frost filter for JETPROFILE300LT



FCLJETP300

Flight case for 2 pcs of JETPROFILE300LT



JPROFILE300BAG1U

Empty ABS case for 1 pc of JETPROFILE300LT



JP300HF

Optional accessory heavy frost filter for JETPROFILE300LT



LRTFXWK1

Wireless kit 1 with TimoFX



UPBOXPRO

Firmware uploader kit, USB IN, 5-pin XLR DMX OUT connector

Downloaded on 27/11/2026 - data may be provisional: features, specifications and appearance are subject to change without notice

TECHNICAL DRAWINGS

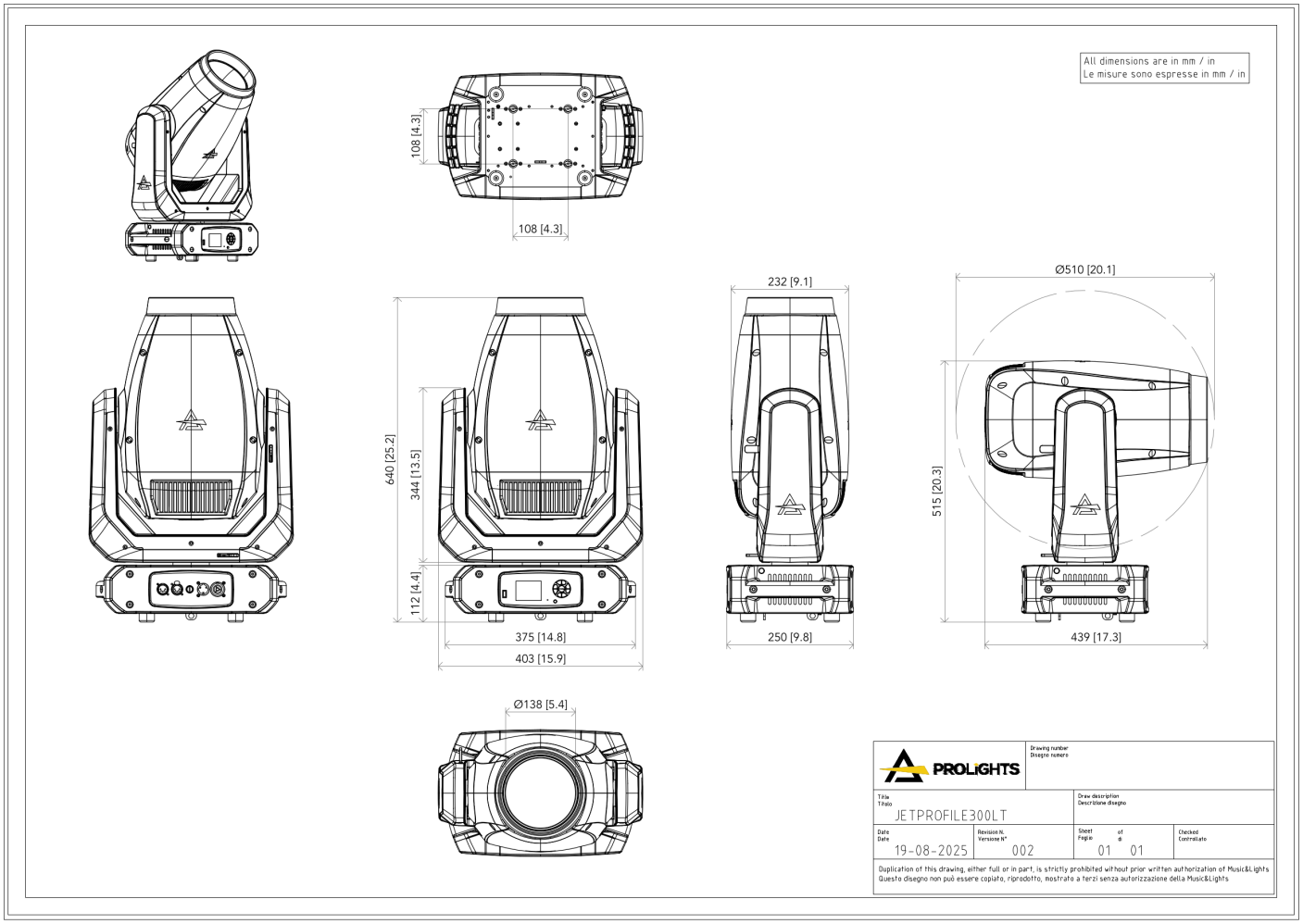

PHOTOMETRICS

Full On - Min Zoom

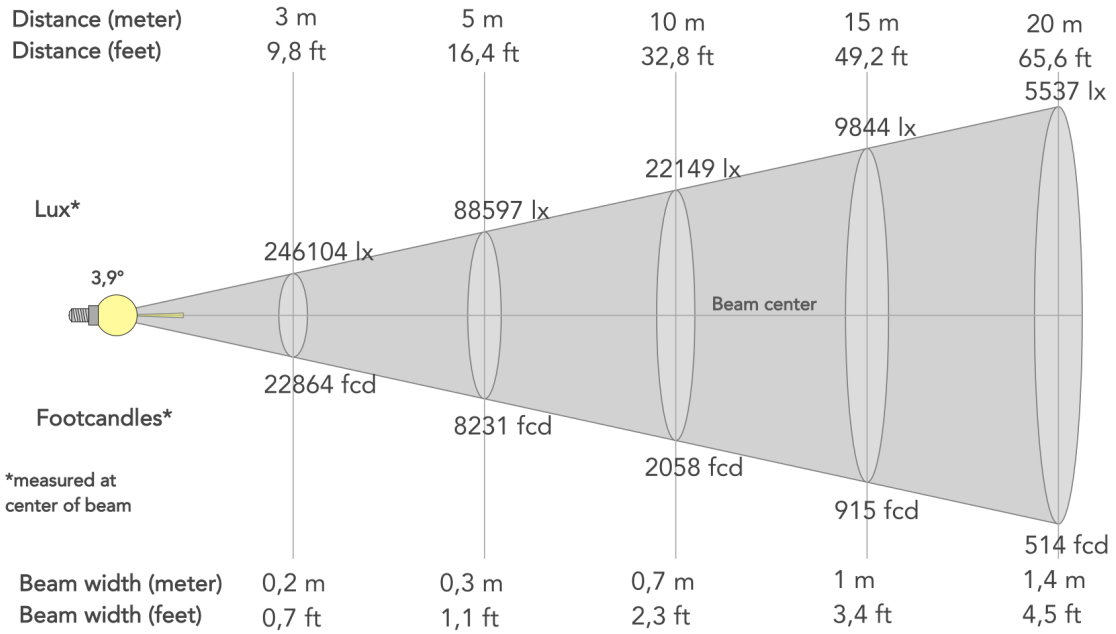

Beam angle (50%): **3.9°**	Field angle (10%): **5.1°**	Cut-off angle (2.5%): **6.1°**

Full On - Max Zoom

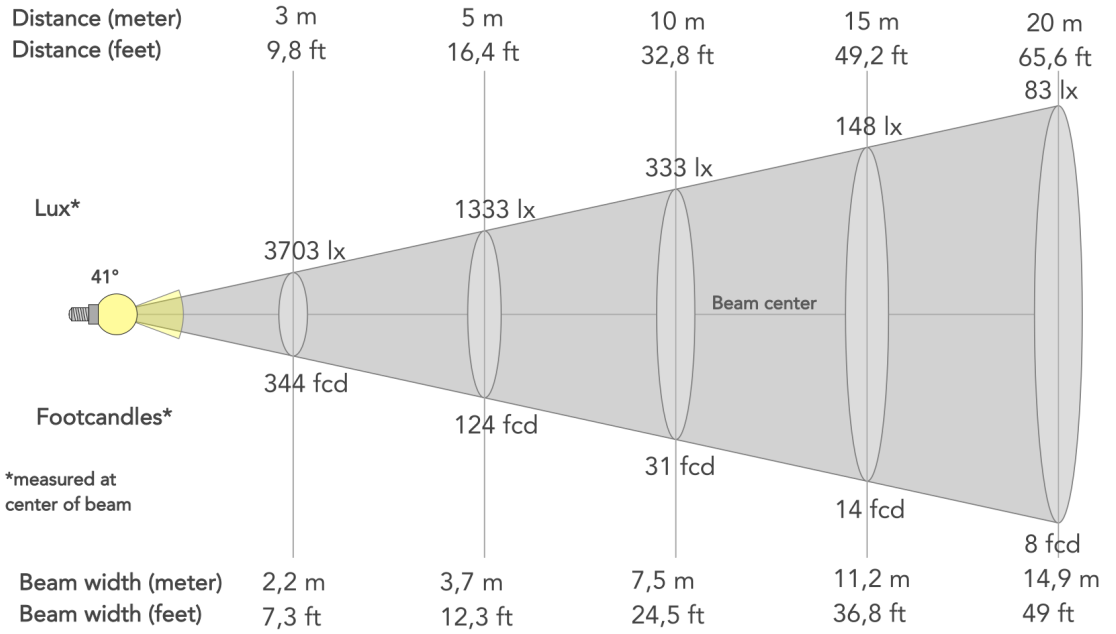

Beam angle (50%): **41°**	Field angle (10%): **42.6°**	Cut-off angle (2.5%): **44.1°**

MUSIC & LIGHTS S.r.l. | Via A. Olivetti, snc
04026 - Minturno (LT) ITALY | info@prolights.it
Tel: +39 0771 72190 | **prolights.it**
VAT No. IT 02057590594

Downloaded on 27/11/2026 - data may be provisional: features, specifications and appearance are subject to change without notice