# **Jet** Spot120

ORDER CODE: JETSPOT120




| SOURCE | ZOOM RANGE | IP RATING |
|---|---|---|
| **120W high-power white LED** | **9,1° - 46,3° motorised linear zoom** | **IP20** |

| WEIGHT | LUMINOUS FLUX (MAX) |
|---|---|
| **13,5kg / 29.76lbs** | **5'686 lm** |

Downloaded on 27/11/2026 - data may be provisional: features, specifications and appearance are subject to change without notice

# TECHNICAL SPECIFICATIONS

## LIGHT SOURCE

| | |
|---|---|
| Source: | 120W high-power white LED |
| Source CCT: | 7500K |
| Luminous flux: | (9,1°) 4'502 lm - (46,3°) 5'686 lm @Full |
| Lux: | (9,1°) 9'452 lx - (46,3°) 681lx @5 m full |
| Source life expectancy: | > 50.000 hrs (L70B10 @Ta 25° C / 77° F) |

## OPTICS

| | |
|---|---|
| Zoom range: | 9,1° - 46,3° motorised linear zoom |
| Lens diameter: | 75mm |
| Lens type: | HD anti-reflection lenses with achromatic coating |
| Focus: | motorised 16-bit |

## COLOUR SYSTEM

| | |
|---|---|
| CCT: | on wheel 3.200 K |
| Colour wheel: | 8 colour filters + open |

## DYNAMIC EFFECTS

| | |
|---|---|
| Control Resolution: | 16-bit dimmer control |
| Circular prism: | 3-f with bi-directional rotation, indexing, interchangeable |
| Frost: | linear 0-100% light interchangeable |

## GOBOS

| | |
|---|---|
| Gobo wheel 1: | 7 rotating gobos + open, interchangeable, indexing |
| Gobo size: | 19,2 mm - image: 16 mm - thickness: up to 3 mm |
| Fixed gobos: | 10 fixed gobos + open |

## CONTROL

| | |
|---|---|
| Supported Protocols: | DMX512, RDM |
| DMX channels: | 20ch |
| RDM: | for remote addressing and parameter configuration |
| Display: | LCD high resolution colour display with autoflip |

## MOVEMENT

| | |
|---|---|
| Pan: | 540° - 16-bit resolution |
| Tilt: | 260° - 16-bit resolution |
| Position feedback: | automatic repositioning after external movement |

## ELECTRONICS

| | |
|---|---|
| Dimmer: | linear 0 - 100% electronic dimmer |
| Dimmer curves: | 4 selectable dimming modes available |
| Strobe / shutter: | 1 - 30 Hz, electronic |
| Display battery: | included, self-charging battery backup |
| Selectable PWM: | 600 to 50,000 Hz (selectable steps) |
| Firmware upgrade with: | via DMX with UPBOXPRO/ UPBOX2 (not included) or via USB pen drive |

## CONNECTIONS

| | |
|---|---|
| Power connection: | Seetronic powerCON TRUE IP65 IN/OUT |
| Signal connection: | Neutrik XLR 5p IN/OUT connectors |

## ELECTRICAL

| | |
|---|---|
| Mains power supply: | 100-240V - 50/60Hz |
| Max power consumption (230V): | 238W |
| Output (at 230V): | 16 units on a single power line |
| Standby power: | 50,2 W |
| Power factor: | > 0,94 |

Downloaded on 27/11/2026 - data may be provisional: features, specifications and appearance are subject to change without notice

## TECHNICAL SPECIFICATIONS

### PHYSICAL

| | |
|---|---|
| IP rating: | IP20 |
| Cooling: | forced-air with low-noise fan |
| Housing: | Aluminium structure with high-resistance polycarbonate cover |
| Finish: | black (RAL 9004) |
| Operating temperature: | Ta -10 to +45 °C (+14 to +113 °F) |
| Dimensions (WxHxD): | 340 x 479 x 205mm |
| Weight: | 13,5kg |

### INSTALLATION

| | |
|---|---|
| Suspension and fixing: | any position with quick-lock Omega brackets |
| Mounting points: | quick-lock Omega sockets |

### CERTIFICATIONS / REPORTS

| | |
|---|---|
| Compliance: | CE, RCM, FCC, cTUVus |

### BOX CONTENT

1 x JETSPOT120

1 x OS24PLUS

1 x 1,5 meters 3G1,5mmq power cable (BARE END - SEETRONIC IP65 power connector)

## ACCESSORIES & RELATED PRODUCTS



**FCLJETH200**
Flight case for 4 pcs of JETHYB200 / JETSPOT120



**JS120HF**
Optional accessory heavy frost filter for JETSPOT120



**JS120LF**
Included accessory light frost filter for JETSPOT120



**JS120P5F**
Optional accessory 5F prism for JETSPOT120



**JS120P4F**
Optional accessory 4F prism for JETSPOT120



**JS120P3F**
Included accessory 3F prism for JETSPOT120



**OS24PLUS**
Quick-lock omega bracket, M12 hole



**UPBOXPRO**
Firmware uploader kit, USB IN, 5-pin XLR DMX OUT connector

Downloaded on 27/11/2026 - data may be provisional: features, specifications and appearance are subject to change without notice

## TECHNICAL DRAWINGS

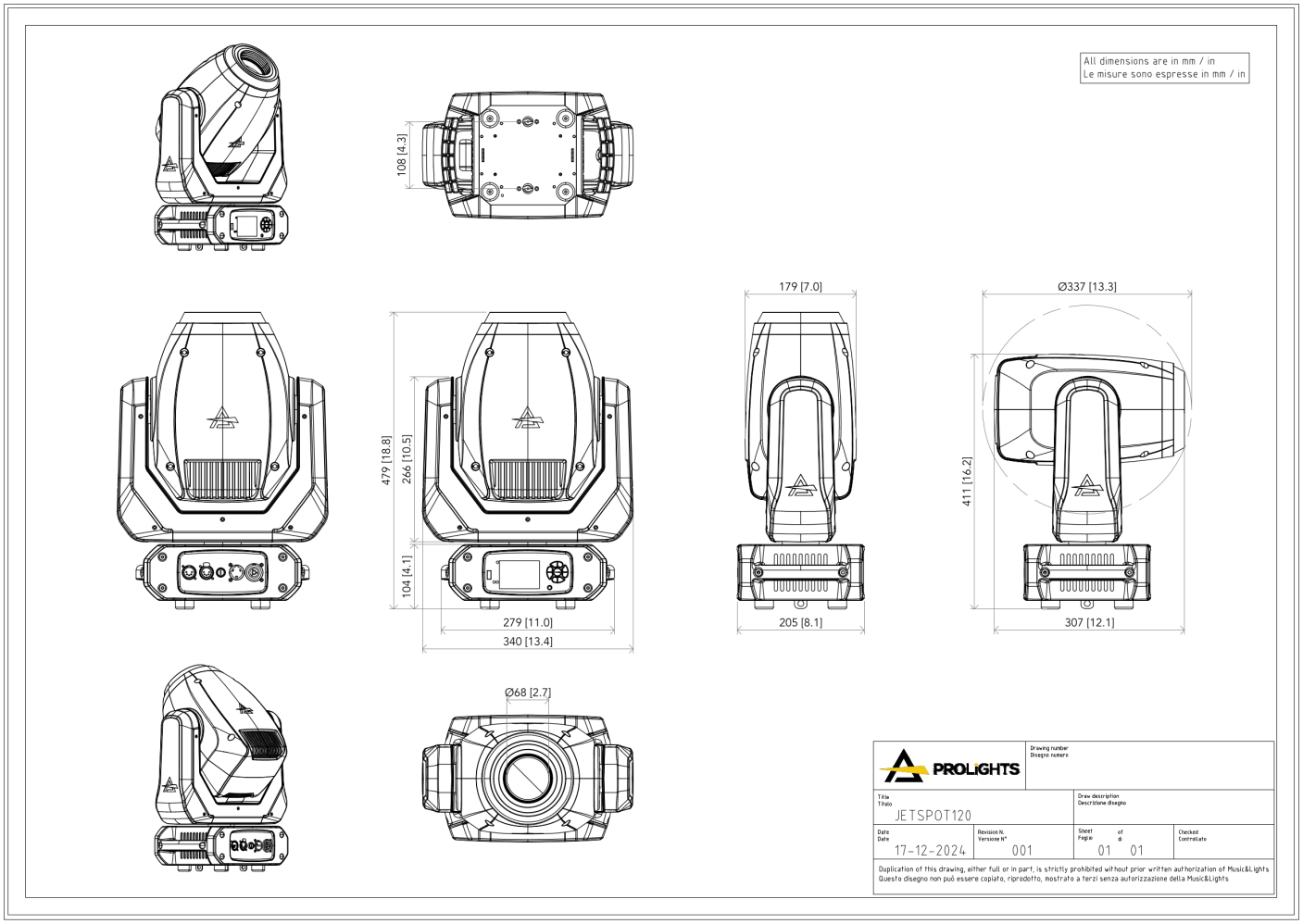

## PHOTOMETRICS

**Full On - Min Zoom**

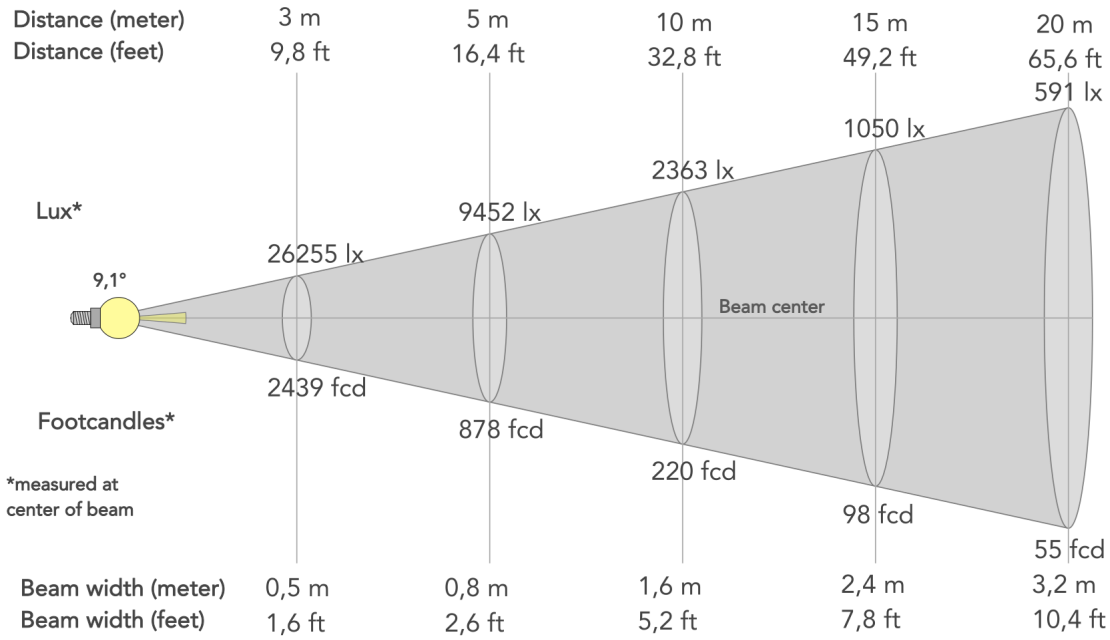


| Beam angle (50%): **9.1°** | Field angle (10%): **11.9°** | Cut-off angle (2.5%): **12.4°** |
|---|---|---|

**Full On - Max Zoom**

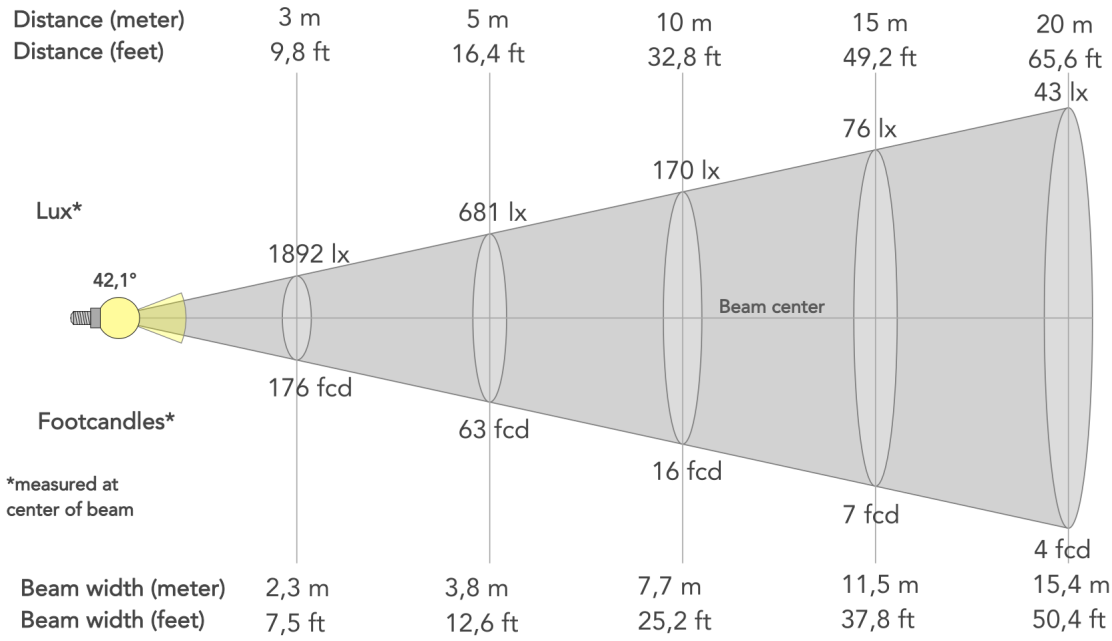


| Beam angle (50%): **42.1°** | Field angle (10%): **45.3°** | Cut-off angle (2.5%): **46.3°** |
|---|---|---|

**MUSIC & LIGHTS** S.r.l. | Via A. Olivetti, snc
04026 - Minturno (LT) ITALY | info@prolights.it
Tel: +39 0771 72190 | **prolights.it**
VAT No. IT 02057590594

Downloaded on 27/11/2026 - data may be provisional: features, specifications and appearance are subject to change without notice