Jet Wash19

ORDER CODE: **JETWASH19**



VERSIONS

	Code	Finishing	RAL
	**JETWASH19**	**Black**	**9004**
	JETWASH19WH	White	9010

SOURCE
19x20W RGBW Osram Ostar LEDs

ZOOM RANGE
4° - 52° motorised linear zoom

IP RATING
IP20

WEIGHT
14,7kg / 32.41lbs

LUMINOUS FLUX (MAX)
3'019 lm

Downloaded on 26/11/2026 - data may be provisional: features, specifications and appearance are subject to change without notice

TECHNICAL SPECIFICATIONS

LIGHT SOURCE

Source:	19x20W RGBW Osram Ostar LEDs
Luminous flux:	(4°) 3'019 lm - (52°) 5'337 @Full
Lux:	Calibration ON: (4°) 23'781 lx - (52°) 682lx @5 m full
Lux:	Calibration OFF: (4°) 28'000 lx - (52°) 788lx @5 m full
Source life expectancy:	> 50.000 hrs (L70B10 @Ta 25° C / 77° F)

OPTICS

Zoom range:	4° - 52° motorised linear zoom
Lens type:	honeycomb gapless plano-convex optics

COLOUR SYSTEM

CCT:	CCT control, + / - green correction, tungsten emulation
White presets:	2.800 K ~ 10.000K
Colour wheel:	virtual colour wheel with macros

DYNAMIC EFFECTS

Control Resolution:	16-bit dimmer control
Special features:	linear crossfade channel from any white to any colour; virtual CTO on colours

CONTROL

Supported Protocols:	DMX512, RDM
DMX channels:	23ch
RDM:	for remote addressing and parameter configuration
Display:	LCD high resolution colour display with autoflip

MOVEMENT

Pan:	540° - 16-bit resolution
Tilt:	233° - 16-bit resolution
Position feedback:	automatic repositioning after external movement
Pan / tilt lock:	for transport and maintenance

ELECTRONICS

Dimmer:	linear 0 - 100% electronic dimmer
Dimmer curves:	4 selectable dimming modes available
Strobe / shutter:	1 - 30 Hz, electronic
Selectable PWM:	600 to 25,000 Hz (selectable steps)
Firmware upgrade with:	via DMX with UPBOXPRO/ UPBOX2 (not included)

CONNECTIONS

Power connection:	Neutrik powerCON TRUE1 IN/OUT connectors
Signal connection:	Amphenol XLR 5p IN/OUT connectors

ELECTRICAL

Mains power supply:	100-240V - 50/60Hz
Max power consumption (230V):	350W
Output (at 230V):	7 units on a single power line
Standby power:	24 W
Power factor:	> 0,96

Downloaded on 26/11/2026 - data may be provisional: features, specifications and appearance are subject to change without notice

TECHNICAL SPECIFICATIONS

PHYSICAL

IP rating:	IP20
Cooling:	filtered forced-air with low-noise fan
Housing:	Aluminium structure with high-resistance polycarbonate cover
Finish:	black (RAL 9004) or white (RAL 9010)
Operating temperature:	Ta -10 to +45 °C (+14 to +113 °F)
Dimensions (WxHxD):	396x487x250mm
Weight:	14,7kg

INSTALLATION

Suspension and fixing:	any position with quick-lock Omega brackets
Mounting points:	quick-lock Omega sockets

CERTIFICATIONS / REPORTS

Compliance:	CE, UKCA, RCM, cTUVus

BOX CONTENT

1 x JETWASH19

2 x OS24PLUS

1 x 1,5 meters 3G1,5mmq power cable (BARE END - NEUTRIK POWERCON TRUE1 IP65 power connector)

ACCESSORIES & RELATED PRODUCTS



OS24PLUS
Quick-lock omega bracket, M12 hole



FCLASTRAW19PIX
Flight case for 4 pcs of ASTRAWASH19PIX / JETWASH19



ASTRAW19PEC
Egg Crate for ASTRAWASH19PIX



UPBOXPRO
Firmware uploader kit, USB IN, 5-pin XLR DMX OUT connector

TECHNICAL DRAWINGS

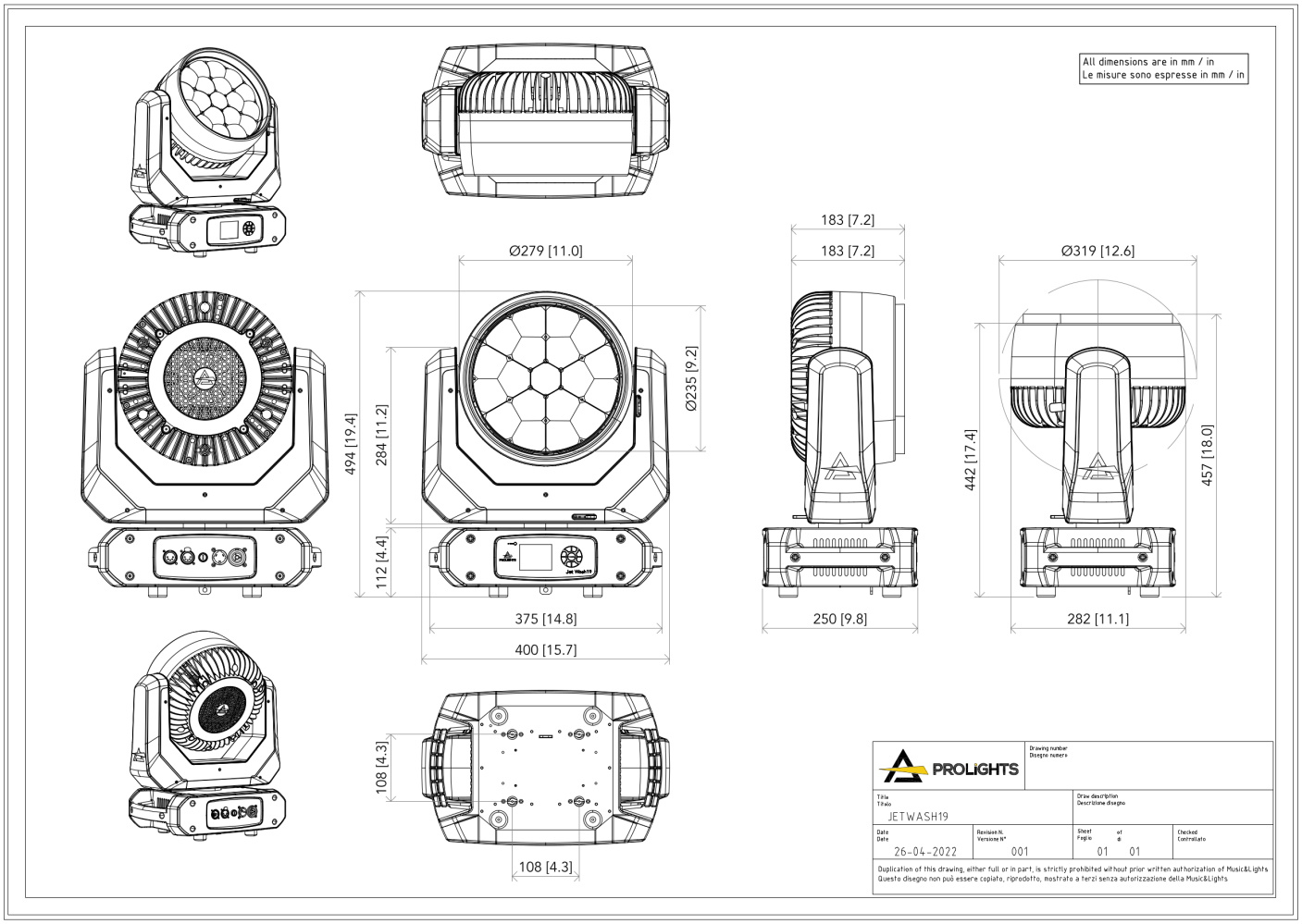

PHOTOMETRICS

Full On - Min Zoom

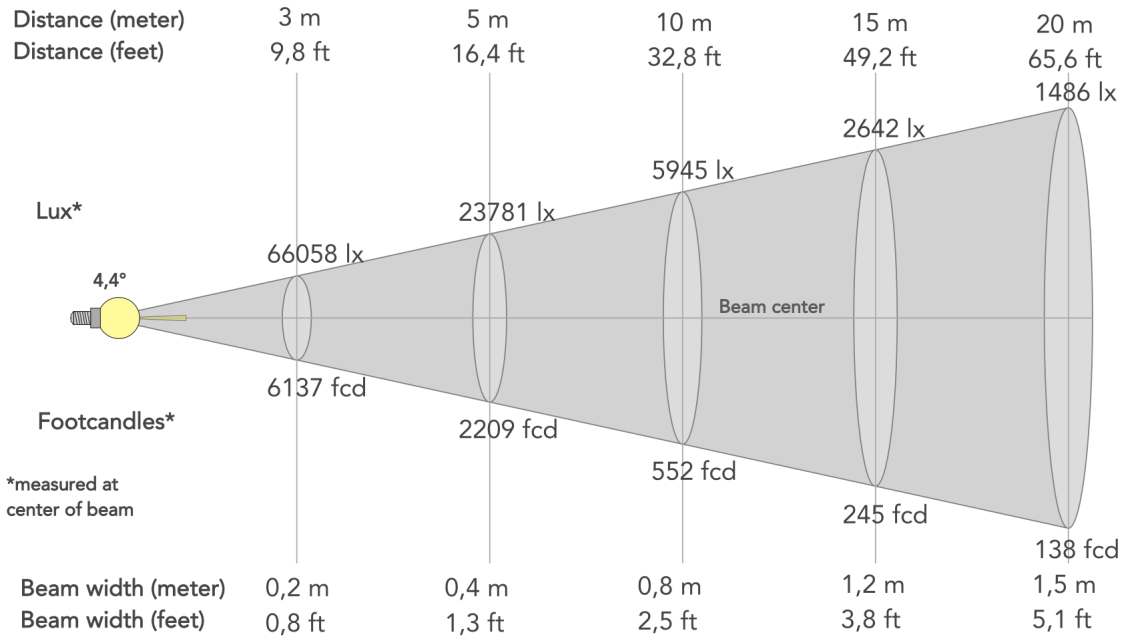

Beam angle (50%): **4.4°**	Field angle (10%): **6.1°**	Cut-off angle (2.5%): **6.9°**

Full On - Max Zoom

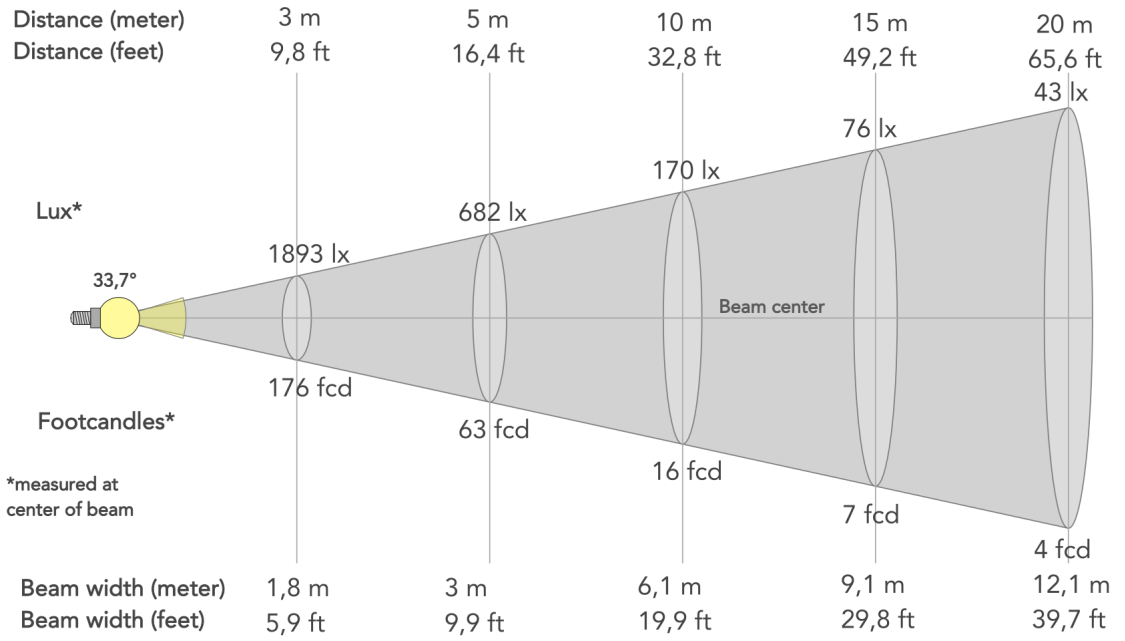

Beam angle (50%): **33.7°**	Field angle (10%): **52.5°**	Cut-off angle (2.5%): **59.7°**