LumiPix 16H

ORDER CODE: LUMIPIX16H

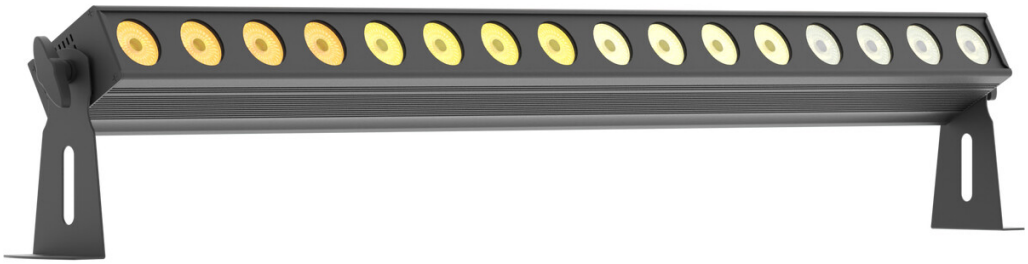

SOURCE	IP RATING	WEIGHT
16x12W RGBWAP LEDs	**IP33**	**5,1kg / 11.24lbs**

Downloaded on 26/11/2026 - data may be provisional: features, specifications and appearance are subject to change without notice

TECHNICAL SPECIFICATIONS

LIGHT SOURCE

Source:	16x12W RGBWAP LEDs
Luminous flux:	4'159
Lux:	(22°) 2'692lx @3 m full
Lux:	(25°) 1'907lx @3 m full
Source life expectancy:	> 50.000 h

OPTICS

Beam angle:	22°
Field angle:	37°
Lens diameter:	42mm
Additional optics:	25° and 45° (optional)

COLOUR SYSTEM

White presets:	3.200 K -10.000K
Colour wheel:	virtual colour wheel with macros
Macros:	several pre-built pixel macros with adjustable speed

DYNAMIC EFFECTS

Static mode:	selection of static colour
Manual mode:	manual adjustment of colour
Auto mode:	built-in programs with execution speed adjustment

CONTROL

Supported Protocols:	DMX512
DMX channels:	6 / 8 / 12 / 96 / 101ch
Pixel control:	pixel2pixel control
Display:	LCD display
Master/Slave:	for synchronised operation of more units linked in a chain

ELECTRONICS

Dimmer:	linear 0 - 100% electronic dimmer
Dimmer curves:	4 selectable dimming modes available
Strobe / shutter:	1-25 Hz, electronic
Firmware upgrade with:	via DMX with UPBOXPRO/ UPBOX1 (not included)

CONNECTIONS

Power connection:	Neutrik powerCON IN/OUT connectors
Signal connection:	XLR 3p + 5p IN/OUT connectors

ELECTRICAL

Mains power supply:	100-240V - 50/60Hz
Max power consumption (230V):	160W
Output (at 230V):	12 units on a single power line
Max power consumption (120V):	165W
Power factor:	pF 0,95 @120 V - pF 0,90 @230 V

PHYSICAL

IP rating:	IP33
Cooling:	fan-free with natural convection
Housing:	Sturdy aluminium profile
Finish:	black
Operating temperature:	Ta -10 to +45 °C (+14 to +113 °F)
Dimensions (WxHxD):	1.000x180x63mm
Weight:	5,1kg

INSTALLATION

Suspension and fixing:	bracket for hanging and floor positioning

CERTIFICATIONS / REPORTS

Compliance:	CE, UKCA, RCM

Downloaded on 26/11/2026 - data may be provisional: features, specifications and appearance are subject to change without notice

TECHNICAL SPECIFICATIONS

BOX CONTENT

1 x LUMIPIX16H

1 x 1,5 meters power cable (BARE END - NEUTRIK POWERCON)

2 x side floor brackets

ACCESSORIES & RELATED PRODUCTS



ARCLUMIL15D42
Optic lens 22°, D.42mm



ARCLUMIL45D42
Optic lens 45°, D.42mm



UPBOXPRO
Firmware uploader kit, USB IN, 5-pin XLR DMX OUT connector

Downloaded on 26/11/2026 - data may be provisional: features, specifications and appearance are subject to change without notice

TECHNICAL DRAWINGS

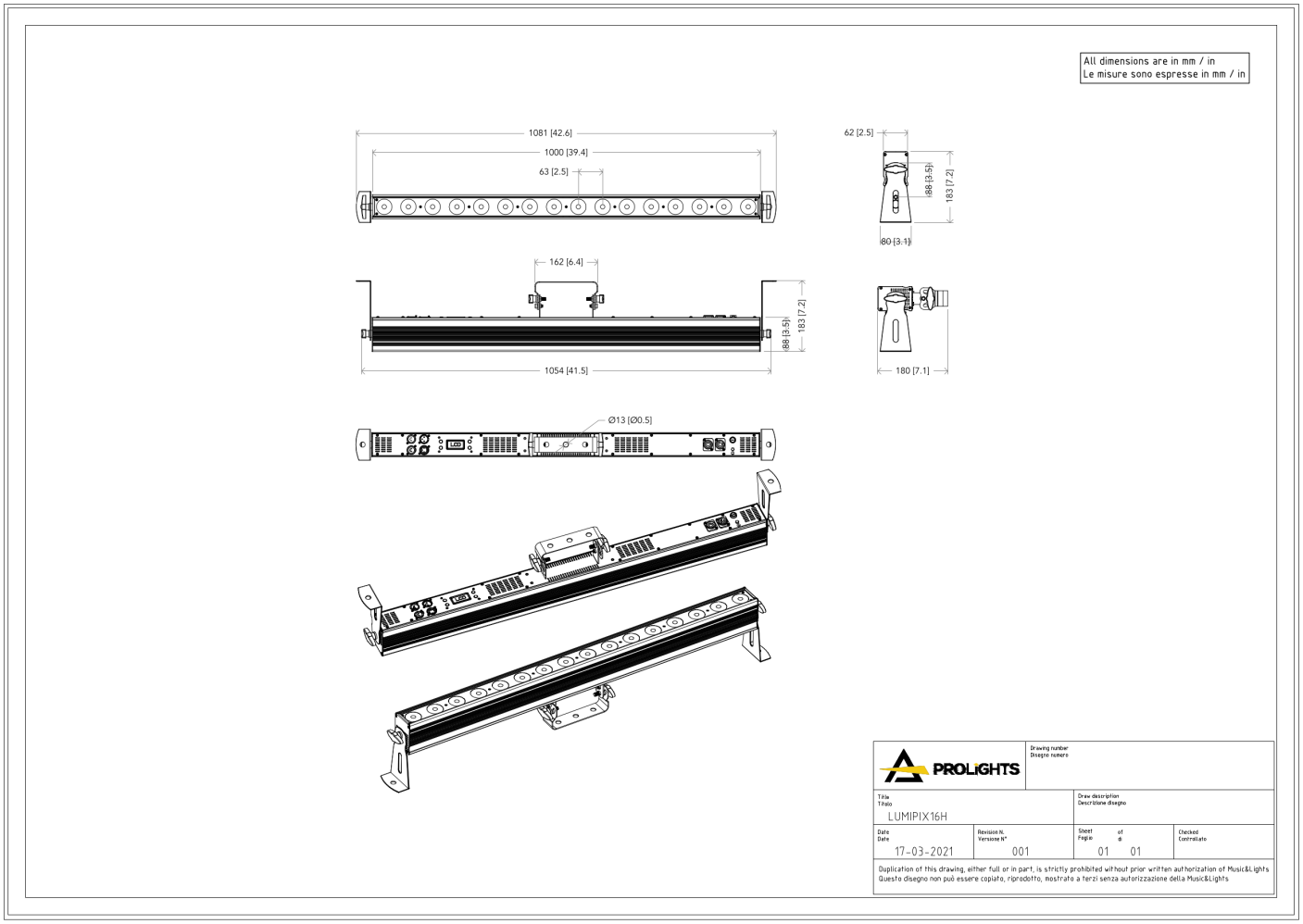

PHOTOMETRICS

Full On - 15°

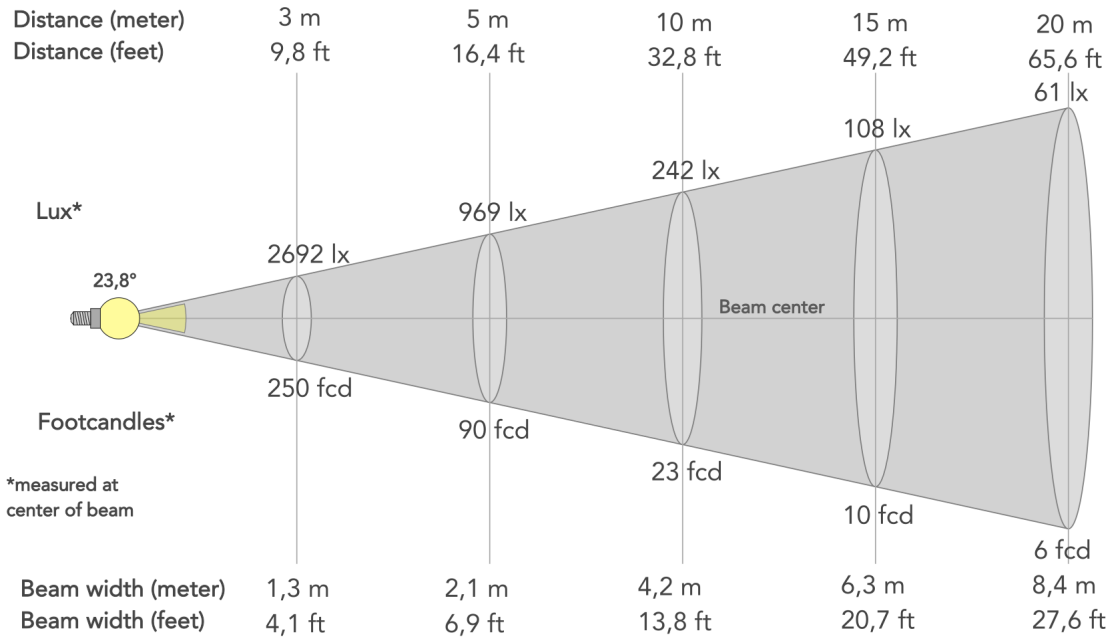

Beam angle (50%): **23.8°**	Field angle (10%): **37.6°**	Cut-off angle (2.5%): **47.3°**

Full On - 25°

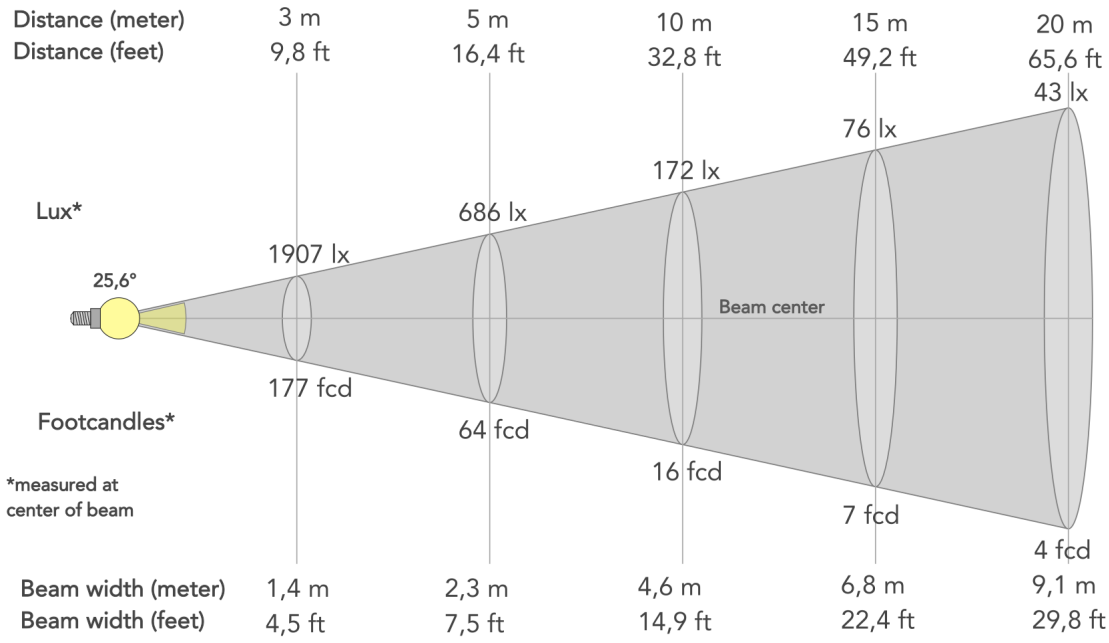

Beam angle (50%): **25.6°**	Field angle (10%): **47.5°**	Cut-off angle (2.5%): **62.4°**

MUSIC & LIGHTS S.r.l. | Via A. Olivetti, snc
04026 - Minturno (LT) ITALY | info@prolights.it
Tel: +39 0771 72190 | **prolights.it**
VAT No. IT 02057590594

Downloaded on 26/11/2026 - data may be provisional: features, specifications and appearance are subject to change without notice