Mf70ff NEW

ORDER CODE: MF70FF



TECHNICAL DRAWINGS

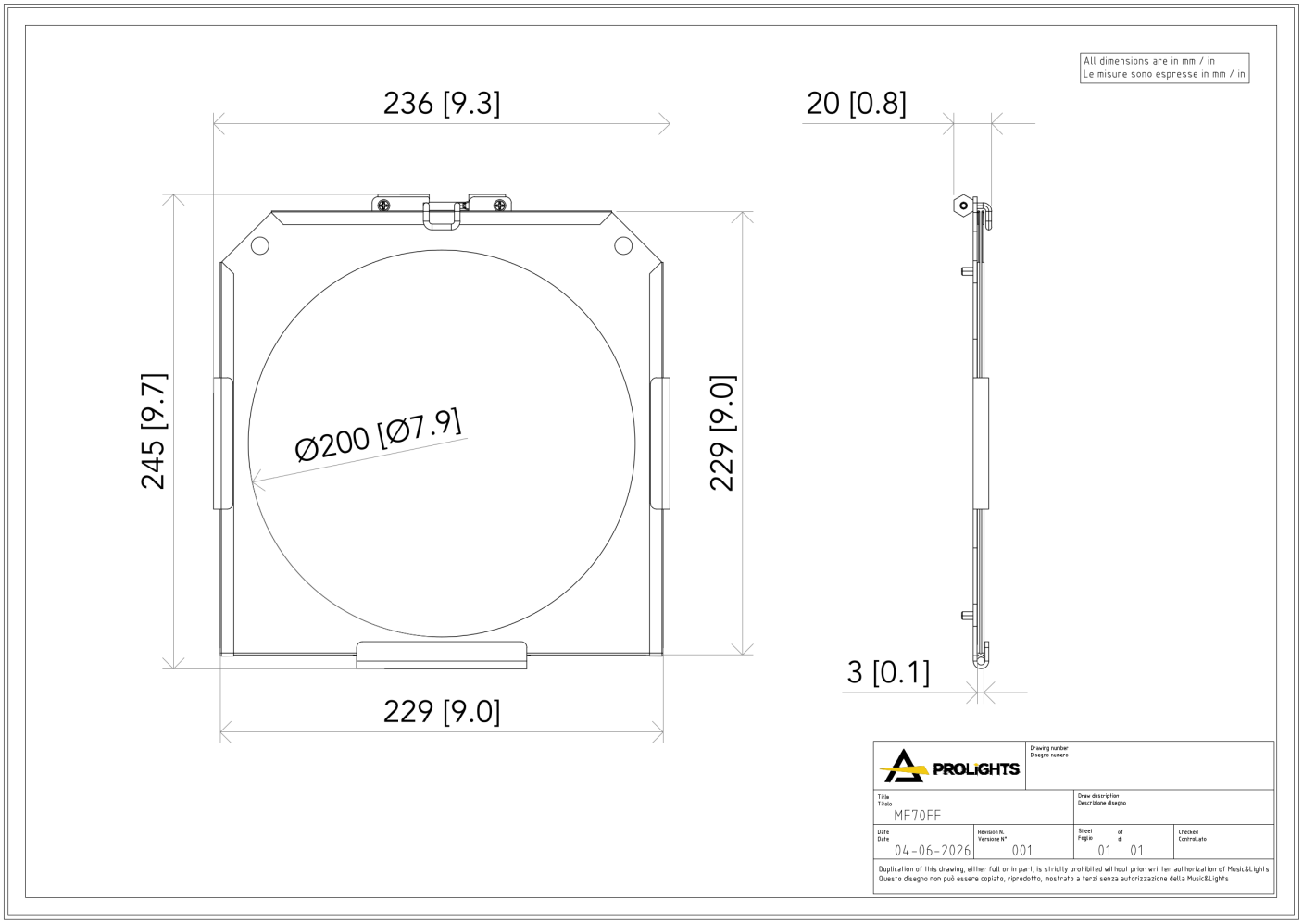

MUSIC & LIGHTS S.r.l. | Via A. Olivetti, snc 04026 - Minturno (LT) ITALY | info@prolights.it Tel: +39 0771 72190 | **prolights.it** VAT No. IT 02057590594

Downloaded on 26/11/2026 - data may be provisional: features, specifications and appearance are subject to change without notice