EclMiniFresnel VW

ORDER CODE: MINIECLFRVWBK



VERSIONS

	Code	Finishing	Pole Operated
	**MINIECLFRVWBK**	**Black**	**No**
	MINIECLFRVWWH	White	No

SOURCE **60W Variable White LED (driven @ 50W)**	ZOOM RANGE **21° - 83° manual**	IP RATING **IP20**
WEIGHT **2,5kg / 5.51lbs**	LUMINOUS FLUX (MAX) **877 lm**	CRI **96 @WW**

Downloaded on 29/11/2026 - data may be provisional: features, specifications and appearance are subject to change without notice

TECHNICAL SPECIFICATIONS

LIGHT SOURCE

Source:	60W Variable White LED (driven @ 50W)
Source CCT:	2.700 K - 5.600K
Luminous flux:	(21°) 877 lm - (83°) 2'320 @Full
Lux:	(21°) 630 lx - (83°) 238lx @3 m
CRI:	96 @WW; 95 @CW; 95 @full
R9:	91 @WW; 88 @CW; 86 @full
TLCI:	95 @WW; 98 @CW; 97 @full
TM30 Rf:	> 94 @WW; >93 @CW; > 94 @full
TM30 Rg:	< 103 @WW; < 104 @CW; < 104 @full
Source life expectancy:	> 50.000 h

OPTICS

Zoom range:	21° - 83° manual
Lens diameter:	100mm
Lens type:	fresnel zoom lens

COLOUR SYSTEM

Colour mixing:	tunable white
CCT:	CCT control through dedicated DMX channel
White presets:	2.700 K - 5.600K
Colour wheel:	built-in white presets

DYNAMIC EFFECTS

Control Resolution:	16-bit dimmer control
Static mode:	selection of static dimmer and color temperature
Manual mode:	manual adjustment of intensity and CT from knob
Auto mode:	built-in programs with execution speed adjustment

CONTROL

Supported Protocols:	DMX512, RDM
DMX channels:	1 / 2 / 4 / 5 / 11ch
RDM:	for remote addressing and parameter configuration
Display:	Graphic User Interface
Stand Alone:	3 rotatory knobs

ELECTRONICS

Dimmer:	linear 0 - 100% electronic dimmer
Dimmer curves:	4 selectable dimming modes available
Strobe / shutter:	1 - 30 Hz, electronic
Selectable PWM:	600 to 25,000 Hz (selectable steps)
Firmware upgrade with:	via DMX with UPBOXPRO/ UPBOX1 (not included)

CONNECTIONS

Power connection:	Neutrik powerCON TRUE1 IN/OUT connectors
Signal connection:	Amphenol XLR 5p IN/OUT connectors

ELECTRICAL

Mains power supply:	100-240V - 50/60Hz
Max power consumption (230V):	50W
Output (at 230V):	35 units on a single power line
Power factor:	> 0,52

PHYSICAL

IP rating:	IP20
Cooling:	forced-air with low-noise fan
Housing:	Sturdy die-cast aluminium body
Finish:	black (RAL 9004) or white (RAL 9003)
Operating temperature:	Ta -20 to +45 °C (-4 to +113 °F)
Dimensions (WxHxD):	191x281x203mm
Weight:	2,5kg

Downloaded on 29/11/2026 - data may be provisional: features, specifications and appearance are subject to change without notice

TECHNICAL SPECIFICATIONS

INSTALLATION

Suspension and fixing:	bracket for hanging and floor positioning
Hardware on-board:	filter frame, 4-leaf barndoor and spigot

CERTIFICATIONS / REPORTS

Compliance:	CE, UKCA, RCM

BOX CONTENT

1 x MINIECLFRVW

1 x MINIECLFRBD

1 x MINIECLFRTPG

ACCESSORIES & RELATED PRODUCTS



ECLFRSPG

Spigot for PROLIGHTS fixtures



MINIECLFRBD

Barn door with 4 directional flaps to adjust the light beam, black



UPBOXPRO

Firmware uploader kit, USB IN, 5-pin XLR DMX OUT connector



MINIECLFRBDWH

Black&White& White barn door 4 directional flaps to adjust the light beam, white



MINIECLFRTPG

Filter frame for MINIECLFR series

TECHNICAL DRAWINGS

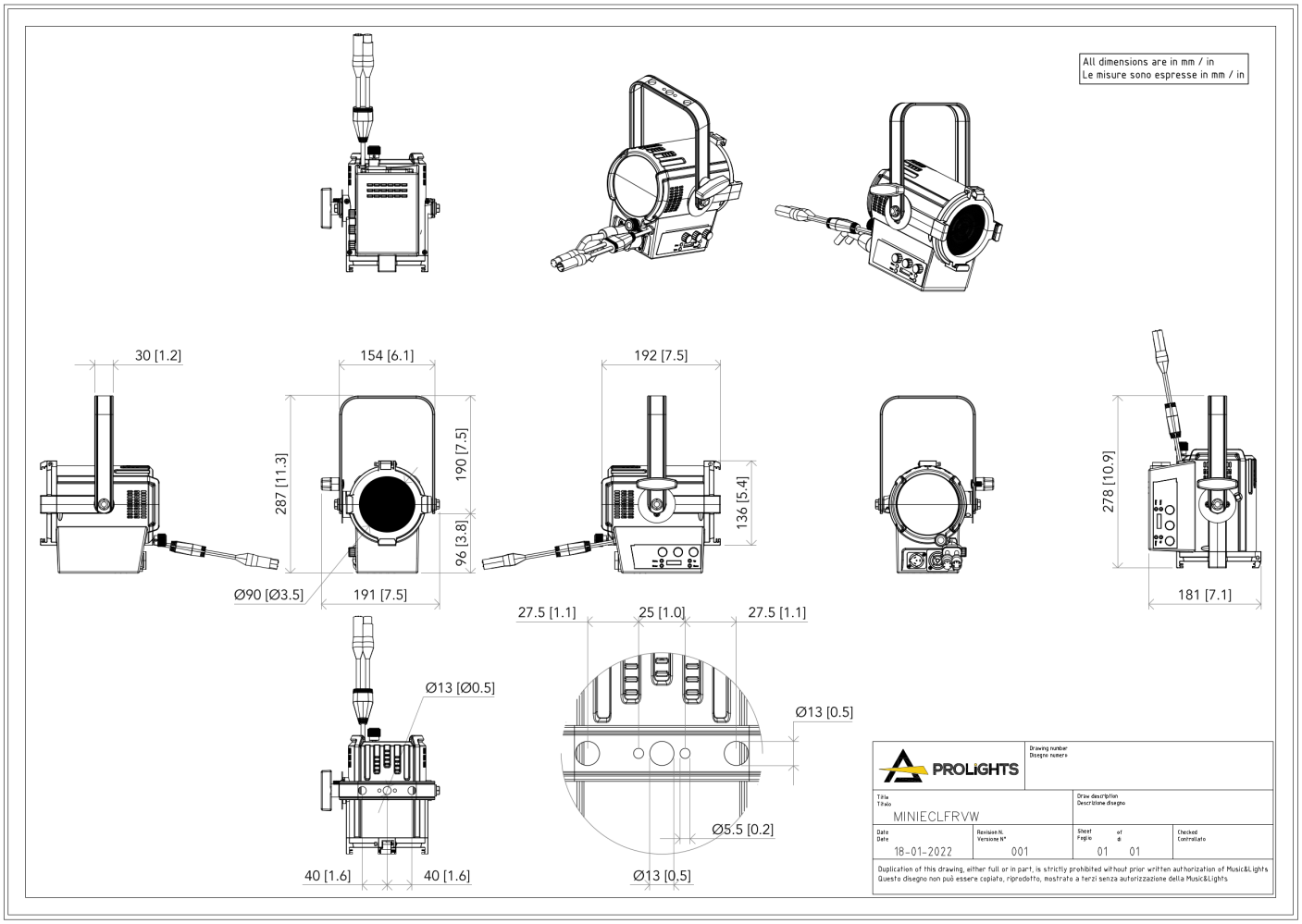

PHOTOMETRICS

Full On - Min Zoom

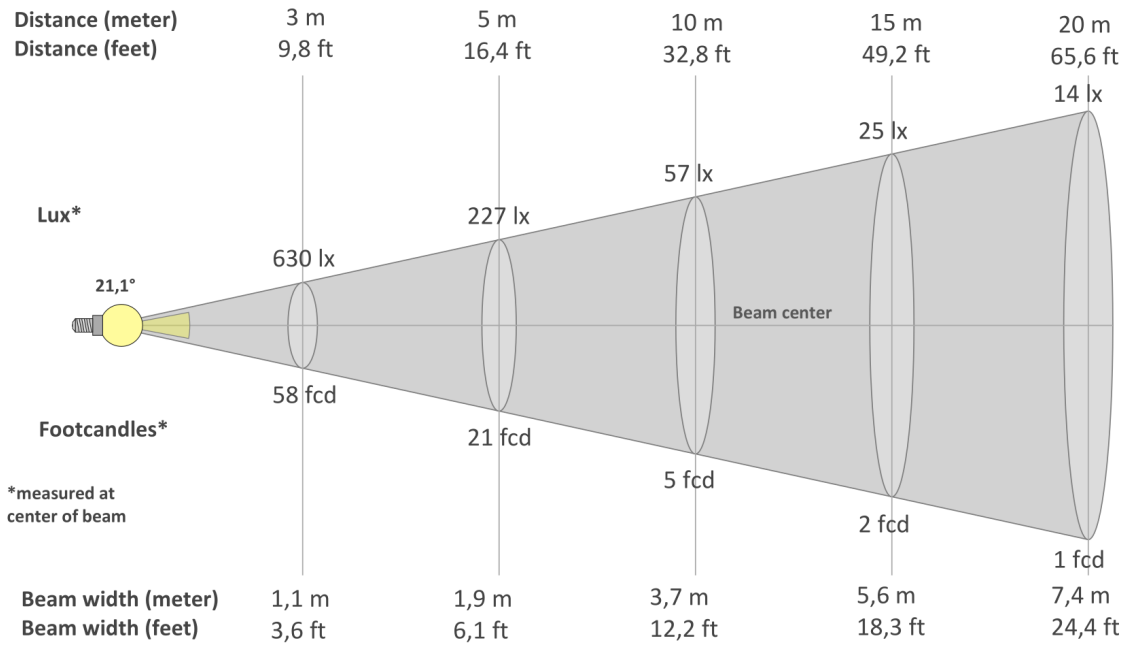

Beam angle (50%): **21.1°**	Field angle (10%): **35.2°**	Cut-off angle (2.5%): **53.8°**

Full On - Max Zoom

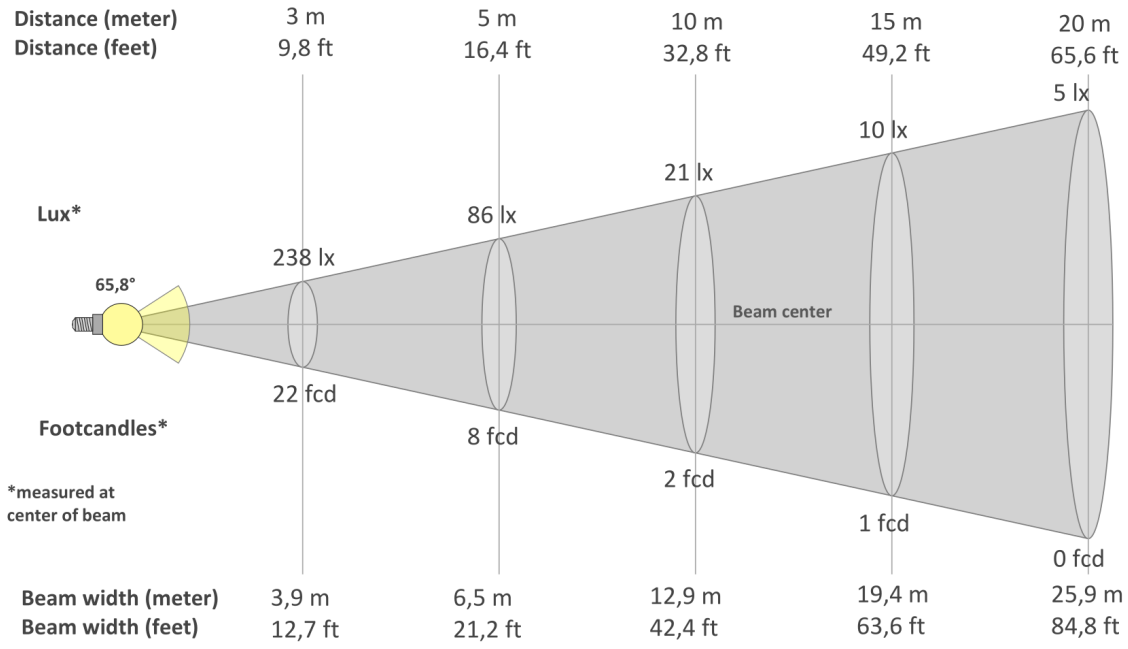

Beam angle (50%): **65.8°**	Field angle (10%): **83.3°**	Cut-off angle (2.5%): **105.9°**