Mosaico C5M

ORDER CODE: MOSAICOC5M



SOURCE
250W high-power white LED

ZOOM RANGE
12,9° - 46,5° motorised linear zoom

IP RATING
IP66 for outdoor installations

WEIGHT
19,3kg / 42.55lbs

LUMINOUS FLUX (MAX)
10'740 lm

Downloaded on 26/11/2026 - data may be provisional: features, specifications and appearance are subject to change without notice

TECHNICAL SPECIFICATIONS

LIGHT SOURCE

Source:	250W high-power white LED
Source CCT:	8.500K
Luminous flux:	(12.9°) 10'740 lm - (46.5°) 11'667 @Full
Lux:	(12.9°) 10'512 lx - (46.5°) 1'409lx @5 m full
Source life expectancy:	> 30.000 hrs (L70B10 @Ta 25° C / 77° F)

OPTICS

Zoom range:	12,9° - 46,5° motorised linear zoom
Lens diameter:	109mm
Lens type:	high-quality glass lens optics
Focus:	motorised 8/16-bit

COLOUR SYSTEM

Colour wheel:	14 colour filters on two colour wheels

DYNAMIC EFFECTS

Animation wheel:	animation wheel with CW and CCW rotation
Circular prism:	3-f with bi-directional rotation, indexing
Frost:	linear 0-100%
Iris:	5 - 100% motorised iris
Special features:	interchangeable animation wheel through magnets and record scenes and create chases and shows throughout these scenes

GOBOS

Gobo wheel 1:	7 rotating gobos + open, interchangeable, indexing
Gobo size (BW):	outer: 26,9 mm - image: 23 mm
Gobo size (Color):	outer: 26,9 mm - image: 20,5 mm

CONTROL

Supported Protocols:	DMX512, RDM, CRMX + WDMX
DMX channels:	12 / 14 / 16 / 19ch
RDM:	for remote addressing and parameter configuration
Display:	black OLED touch display
Stand Alone:	Stand Alone programmer and playback

ELECTRONICS

Dimmer:	linear 0 - 100% electronic dimmer
Dimmer curves:	4 selectable dimming modes available
Strobe / shutter:	1~30 Hz, electronic
Firmware upgrade with:	via DMX with UPBOXPRO/ UPBOX1 (not included)

CONNECTIONS

Power connection:	1,8 m moulded IP power IN/OUT connectors
Signal connection:	1,8 m moulded IP signal IN/OUT connectors
Wireless Connection:	integrated LumenRadio TiMo FX RDM - CRMX and W-DMX compatible
Data connection:	W-DMX transreceiver
Adaptors:	XLR and BARE END 16A adaptors included

Downloaded on 26/11/2026 - data may be provisional: features, specifications and appearance are subject to change without notice

TECHNICAL SPECIFICATIONS

ELECTRICAL

Mains power supply:	100-240V - 50/60Hz
Max power consumption (230V):	320W
Output (at 230V):	6 units on a single power line
Standby power:	56 W
Power factor:	>0,95

PHYSICAL

IP rating:	IP66 for outdoor installations
IK rating:	IK09 impact rating
Cooling:	forced-air with IP-rated low-noise fan
Housing:	Sturdy die-cast aluminium body, scratch-resistant C5M Marine Grade paint (as standard)
Finish:	grey (RAL 9006)
Operating temperature:	Ta -20 to +45 °C (-4 to +113 °F)
Dimensions (WxHxD):	332x425x453mm
Weight:	19,3kg

INSTALLATION

Suspension and fixing:	bracket for hanging and floor positioning
Other:	Inspectable cover window for gobos replacement and maintenance

CERTIFICATIONS / REPORTS

Compliance:	CE, UKCA, RCM, cTUVus, FCC

BOX CONTENT

1 x MOSAICOC5M

1 x 0,28 meters 3G1mmq power cable (BARE END - IP connection adapter)

1 x 5p XLR - IP connection female adapter

1 x 5p XLR - IP connection male adapter

Downloaded on 26/11/2026 - data may be provisional: features, specifications and appearance are subject to change without notice

ACCESSORIES & RELATED PRODUCTS



AETHERLINK
IP66 rated 1 Universe CRMX wireless transceiver for permanent outdoor installation



UPBOXPRO
Firmware uploader kit, USB IN, 5-pin XLR DMX OUT connector



AWEXDC1L20
IP67 DMX extension cable for outdoor architectural projectors, L.20 m



AWEXDC1L10
IP67 DMX extension cable for outdoor architectural projectors, L.10 m



AWEXDC1L05
IP67 DMX extension cable for outdoor architectural projectors, L.05 m



AWEXDC1L03
IP67 DMX extension cable for outdoor architectural projectors, L.03 m



AWEXAC1L20
IP67 power extension cable for outdoor architectural projectors, L.2 0m



AWEXAC1L10
IP67 power extension cable for outdoor architectural projectors, L.10 m



AWEXAC1L05
IP67 power extension cable for outdoor architectural projectors, L.05 m



AWEXAC1L03
IP67 power extension cable for outdoor architectural projectors, L.03 m



FCLMOSAICO
Flightcase for 2x MOSAICO, foam shells included

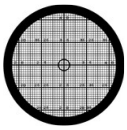

GBVMAP00123F00
Gobo Mapping, F size, black and white (gobo holder included)



AWEXAC12ADP
Power adapter from AWEXAC1 cable series to AWEXAC2 cable series



AWEXDC1221ADP
Signal adapter kit from AWEXDC1 series to AWEXDC2 series and vice versa

Downloaded on 26/11/2026 - data may be provisional: features, specifications and appearance are subject to change without notice

TECHNICAL DRAWINGS

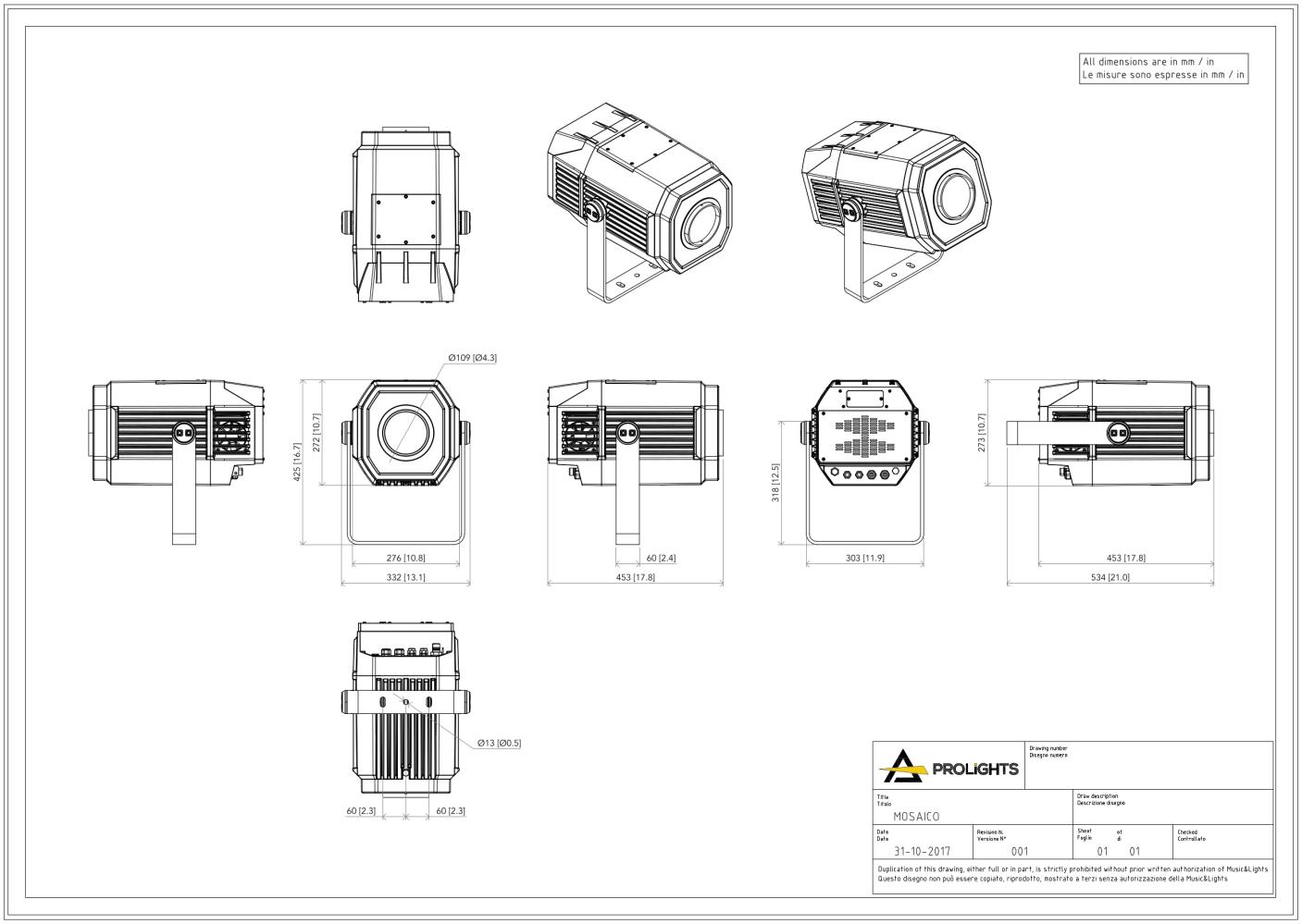

PHOTOMETRICS

Full on - Min Zoom

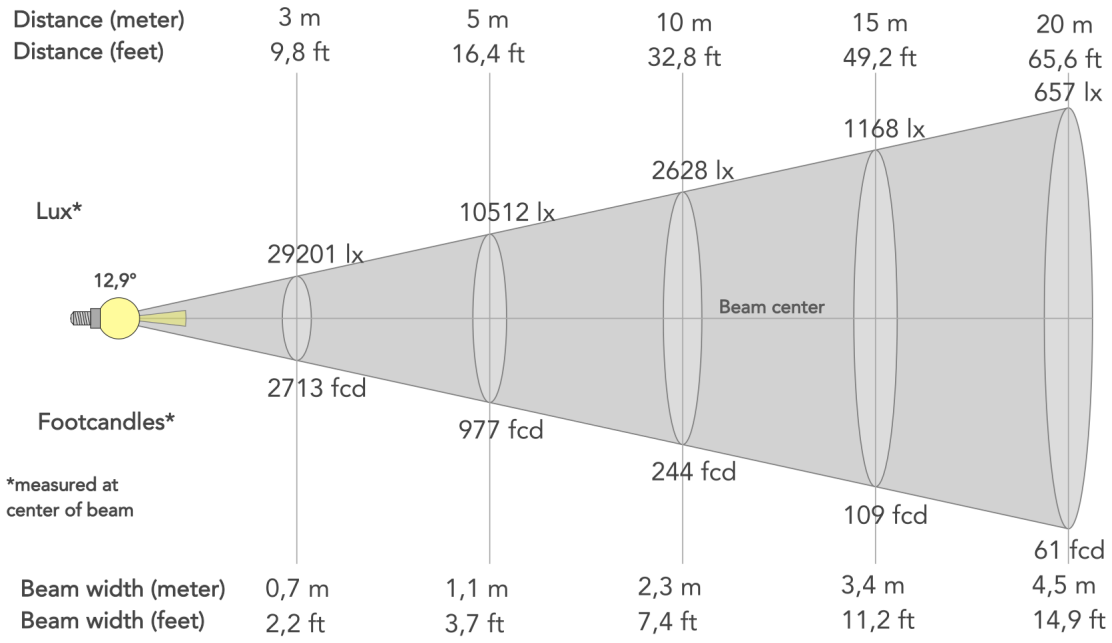

Beam angle (50%): **12.9°**	Field angle (10%): **15.9°**	Cut-off angle (2.5%): **17.3°**

Full on - Max Zoom

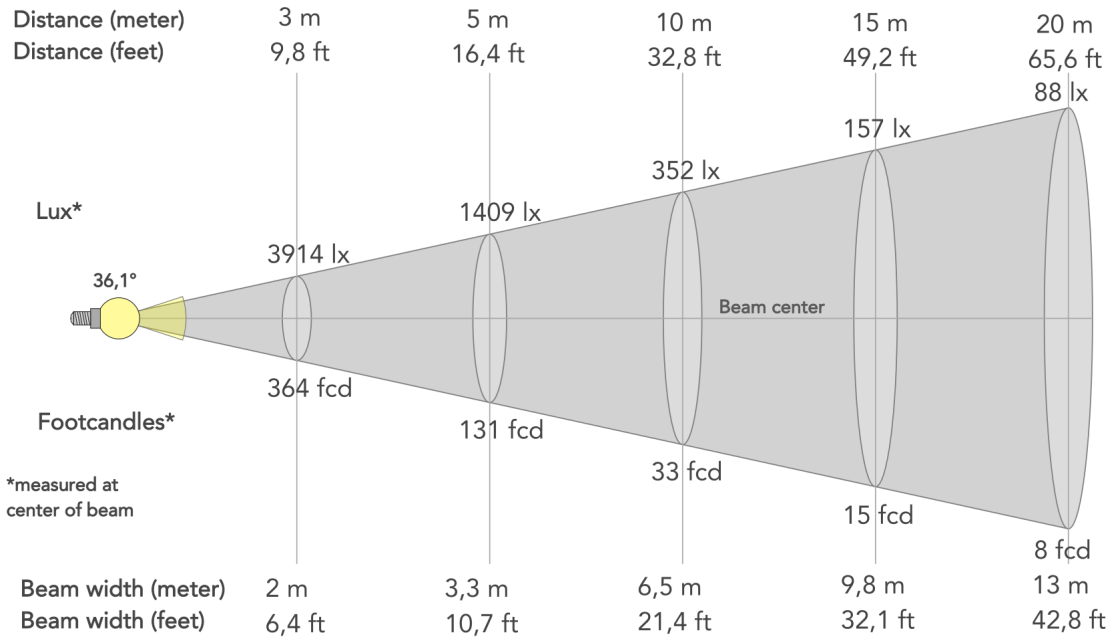

Beam angle (50%): **36.1°**	Field angle (10%): **46.4°**	Cut-off angle (2.5%): **49.7°**