Mosaico Jr

ORDER CODE: MOSAICOJR



SOURCE	ZOOM RANGE	IP RATING
70W White LED	**14,7° - 45° motorised linear zoom**	**IP66 for outdoor installations**

WEIGHT	LUMINOUS FLUX (MAX)
10kg / 22.05lbs	**2'595 lm**

TECHNICAL SPECIFICATIONS

LIGHT SOURCE

Source:	70W White LED
Source CCT:	7.000K
Luminous flux:	(14.7°) 2'595 lm - (45°) 2'628
Lux:	(14.7°) 1'927 lx - (45°) 294lx @5 m full
Source life expectancy:	> 30.000 hrs (L70B10 @Ta 25° C / 77° F)

OPTICS

Zoom range:	14,7° - 45° motorised linear zoom
Lens diameter:	63mm
Lens type:	high-quality glass lens optics
Focus:	motorised 8/16-bit

COLOUR SYSTEM

Colour wheel:	7 colour filters + open

GOBOS

Gobo wheel 1:	7 rotating gobos + open, indexing
Gobo size (BW):	gobo Ø 15,8 mm - img Ø 12,5 mm
Gobo size (Color):	gobo Ø 15,8 mm - img Ø 9 mm

CONTROL

Supported Protocols:	DMX512, RDM, CRMX + WDMX
DMX channels:	8 / 14ch
RDM:	for remote addressing and parameter configuration
Display:	Graphic User Interface
Stand Alone:	scene recording with chase and show playback
Master/Slave:	for synchronised operation of more units linked in a chain

ELECTRONICS

Dimmer:	linear 0 - 100% electronic dimmer
Dimmer curves:	4 selectable dimming modes available
Strobe / shutter:	1 ~ 21 Hz, electronic
Display battery:	included, self-charging battery backup
Firmware upgrade with:	via DMX with UPBOXPRO/ UPBOX1 (not included)

CONNECTIONS

Power connection:	1,8 m moulded IP power IN/OUT connectors
Signal connection:	1,8 m moulded IP signal IN/OUT connectors
Wireless Connection:	integrated LumenRadio TiMo FX RDM - CRMX and W-DMX compatible
Adaptors:	XLR and BARE END 16A adaptors included

ELECTRICAL

Mains power supply:	100-240V - 50/60Hz
Max power consumption (230V):	90W
Standby power:	18 W
Power factor:	>0,92

CERTIFICATIONS / REPORTS

Compliance:	CE, UKCA, RCM, cTUVus, FCC

Downloaded on 28/11/2026 - data may be provisional: features, specifications and appearance are subject to change without notice

TECHNICAL SPECIFICATIONS

PHYSICAL

IP rating:	IP66 for outdoor installations
IK rating:	IK09 impact rating
Cooling:	forced-air with IP-rated low-noise fan
Housing:	Die-cast aluminium
Finish:	grey (RAL 9006)
Operating temperature:	Ta -20 to +45 °C (-4 to +113 °F)
Dimensions (WxHxD):	247x258x244mm
Weight:	10kg

INSTALLATION

Suspension and fixing:	bracket for hanging and floor positioning
Other:	inspectable cover window for image replacement and maintenance and record scenes and create chases and shows throughout these scenes

BOX CONTENT

1 x MOSAICOJR

1 x 0,28 meters 3G1mmq power cable (BARE END - IP connection adapter)

1 x 5p XLR - IP connection male adapter

1 x 5p XLR - IP connection female adapter

ACCESSORIES & RELATED PRODUCTS



AETHERLINK
IP66 rated 1 Universe CRMX wireless transceiver for permanent outdoor installation



MOSJRCCW1
Optional color wheel for MOSAICOJR

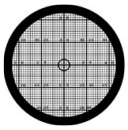

GBVMAP00112G00
Gobo Mapping, G size, black and white (gobo holder included)



AWEXDC1221ADP
Signal adapter kit from AWEXDC1 series to AWEXDC2 series and vice versa



AWEXAC12ADP
Power adapter from AWEXAC1 cable series to AWEXAC2 cable series



AWEXAC1L03
IP67 power extension cable for outdoor architectural projectors, L.03 m



AWEXAC1L05
IP67 power extension cable for outdoor architectural projectors, L.05 m



AWEXAC1L10
IP67 power extension cable for outdoor architectural projectors, L.10 m



AWEXAC1L20
IP67 power extension cable for outdoor architectural projectors, L.2 0m



AWEXDC1L03
IP67 DMX extension cable for outdoor architectural projectors, L.03 m



AWEXDC1L05
IP67 DMX extension cable for outdoor architectural projectors, L.05 m



AWEXDC1L10
IP67 DMX extension cable for outdoor architectural projectors, L.10 m



AWEXDC1L20
IP67 DMX extension cable for outdoor architectural projectors, L.20 m



UPBOXPRO
Firmware uploader kit, USB IN, 5-pin XLR DMX OUT connector

Downloaded on 28/11/2026 - data may be provisional: features, specifications and appearance are subject to change without notice

TECHNICAL DRAWINGS

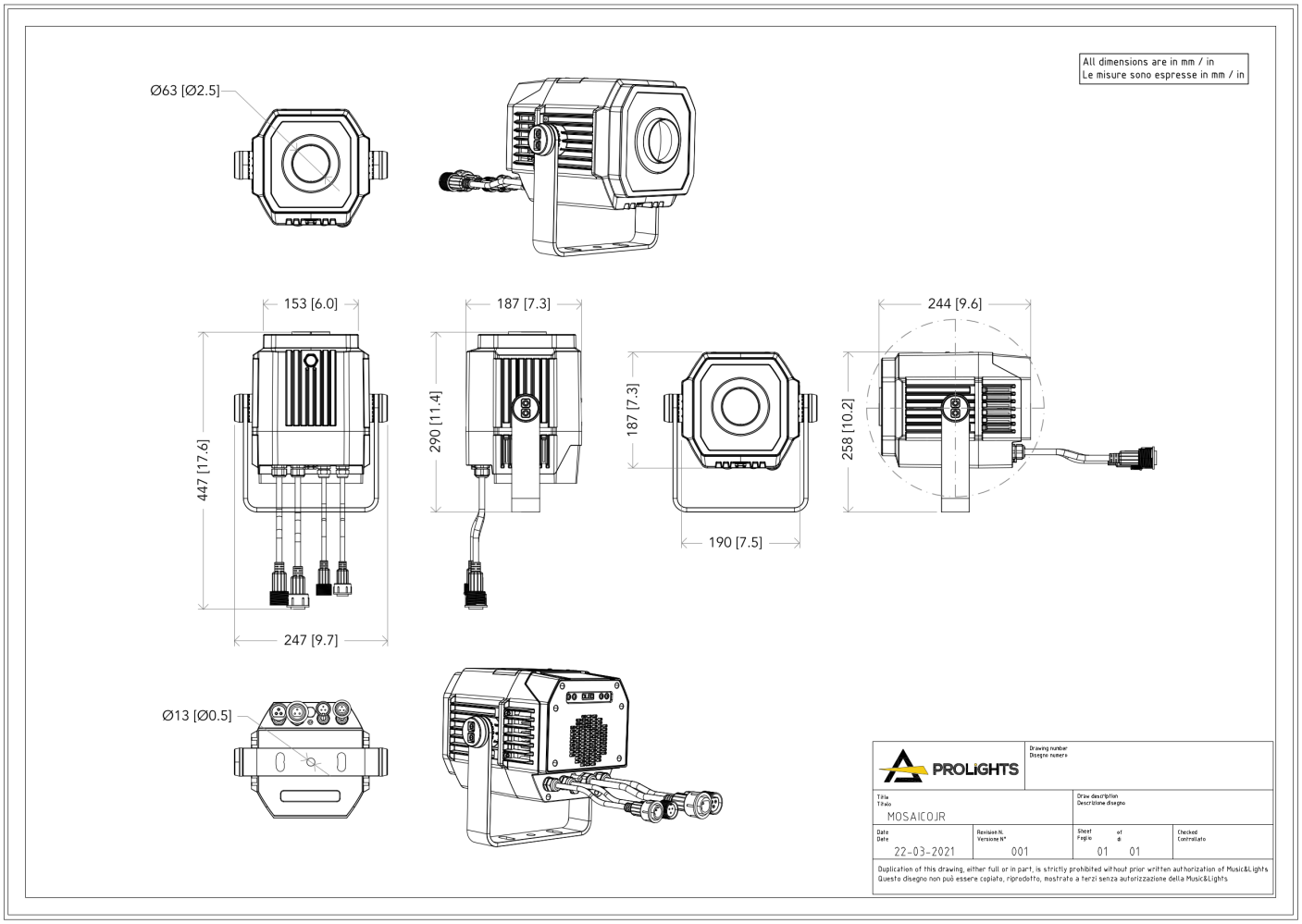

PHOTOMETRICS

Full on - Min Zoom

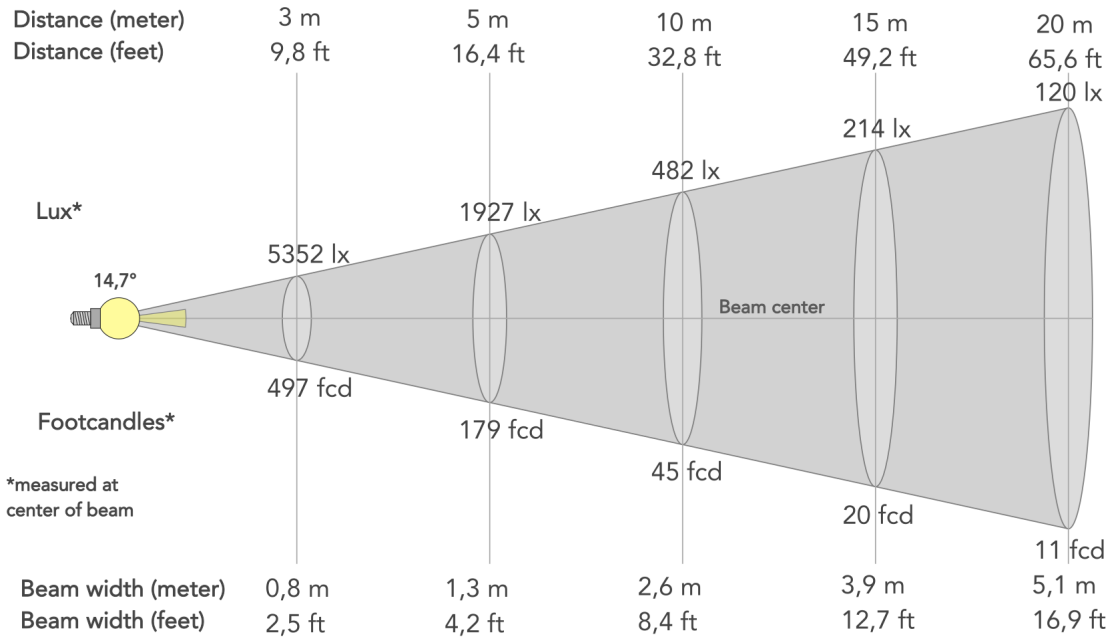

Beam angle (50%): **14.7°**	Field angle (10%): **17.6°**	Cut-off angle (2.5%): **18.6°**

Full on - Max Zoom

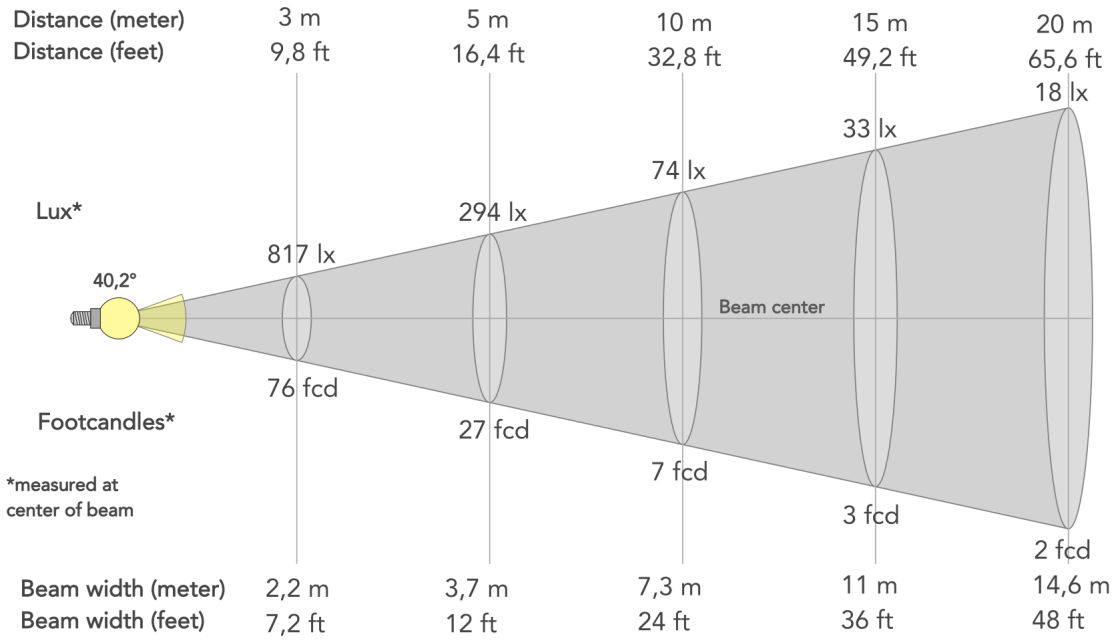

Beam angle (50%): **40.2°**	Field angle (10%): **44.9°**	Cut-off angle (2.5%): **45.8°**