Mosaico LC5M

ORDER CODE: MOSAICOLC5M



SOURCE	ZOOM RANGE	IP RATING
300W high-power white LED	**7°- 49° motorised linear zoom**	**IP66 for outdoor installations**

WEIGHT	LUMINOUS FLUX (MAX)
25kg / 55.12lbs	**8'536 lm**

Downloaded on 28/11/2026 - data may be provisional: features, specifications and appearance are subject to change without notice

TECHNICAL SPECIFICATIONS

LIGHT SOURCE

Source:	300W high-power white LED
Source CCT:	8.000K
Luminous flux:	(7°) 8'536 lm - (49°) 11'729 @Full
Lux:	(7°) 28'230 lx - (49°) 867lx @5 m full
Source life expectancy:	> 30.000 hrs (L70B10 @Ta 25° C / 77° F)

OPTICS

Zoom range:	7°- 49° motorised linear zoom
Lens diameter:	110mm
Lens type:	HD anti-reflection lenses with achromatic coating
Focus:	motorised 8/16-bit

COLOUR SYSTEM

Colour mixing:	cold white LED with colour wheel
Colour wheel:	7 colour filters + open

DYNAMIC EFFECTS

Control Resolution:	16-bit dimmer control
Shutter system:	4 shutter blades with position and ±30° angle adjustment, ±45° rotation of the complete framing system
Animation wheel:	magnetic interchangeable animation wheel with CW and CCW rotation
FX generator:	shutter macros with adjustable speed
Circular prism:	3f-f with bi-directional rotation, indexing
Frost:	linear 0-100%
Special features:	record scenes and create chases and shows throughout these scenes

GOBOS

Gobo wheel 1:	open + 7 rotating gobos + open, interchangeable, indexing
Gobo size (BW):	outer: 26,9 mm - image: 23 mm
Gobo size (Color):	outer: 26,9 mm - image: 20,5 mm

CONTROL

Supported Protocols:	DMX512, RDM, CRMX + WDMX
DMX channels:	22 / 32 / 43ch
RDM:	for remote addressing and parameter configuration
Display:	Graphic User Interface
Stand Alone:	Stand Alone programmer and playback

Downloaded on 28/11/2026 - data may be provisional: features, specifications and appearance are subject to change without notice

TECHNICAL SPECIFICATIONS

ELECTRONICS

Dimmer:	linear 0 - 100% electronic dimmer
Dimmer curves:	4 selectable dimming modes available
Strobe / shutter:	1~30 Hz, electronic
Display battery:	included, self-charging battery backup
Selectable PWM:	600 to 25,000 Hz (selectable steps)
Firmware upgrade with:	via DMX with UPBOXPRO/ UPBOX1 (not included)

CONNECTIONS

Power connection:	1,8 m moulded IP power IN/OUT connectors
Signal connection:	1,8 m moulded IP signal IN/OUT connectors
Wireless Connection:	integrated LumenRadio TiMo FX RDM - CRMX and W-DMX compatible
Data connection:	W-DMX transreceiver
Adaptors:	XLR and BARE END 16A adaptors included

ELECTRICAL

Mains power supply:	100-240V - 50/60Hz
Max power consumption (230V):	440W
Output (at 230V):	6 units on a single power line
Standby power:	58 W
Power factor:	> 0,98

PHYSICAL

IP rating:	IP66 for outdoor installations
IK rating:	IK09 impact rating
Cooling:	heat pipe with low-noise fan
Housing:	Sturdy die-cast aluminium body, scratch-resistant C5M Marine Grade paint (as standard)
Finish:	grey (RAL 9006), C5-M marine grade coating
Operating temperature:	Ta -20 to +45 °C (-4 to +113 °F)
Dimensions (WxHxD):	362x428x451mm
Weight:	25kg

INSTALLATION

Suspension and fixing:	bracket for hanging and floor positioning
Other:	Inspectable cover window for gobos replacement and maintenance

CERTIFICATIONS / REPORTS

Compliance:	CE, UKCA, RCM, cTUVus, FCC

BOX CONTENT

1 x MOSAICOLC5M

1 x 0,28 meters 3G1mmq power cable (BARE END - IP connection adapter)

1 x 5p XLR - IP connection female adapter

1 x 5p XLR - IP connection male adapter

Downloaded on 28/11/2026 - data may be provisional: features, specifications and appearance are subject to change without notice

ACCESSORIES & RELATED PRODUCTS



AETHERLINK
IP66 rated 1 Universe CRMX wireless transceiver for permanent outdoor installation



AWEXDC1221ADP
Signal adapter kit from AWEXDC1 series to AWEXDC2 series and vice versa



AWEXAC12ADP
Power adapter from AWEXAC1 cable series to AWEXAC2 cable series

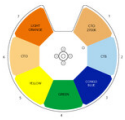

MOSLCCW1
Optional color wheel 1 for MOSAICOL



MOSLCCW2
Optional color wheel 2 for MOSAICOL



MOSLCCW3
Optional color wheel 3 for MOSAICOL



MOSLCCW4
Optional color wheel 4 for MOSAICOL

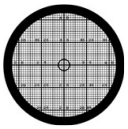

GBVMAP00123F00
Gobo Mapping, F size, black and white (gobo holder included)



FCLMOSAICOL
Flightcase for 2 pcs of MOSAICOL



AWEXDC1L03
IP67 DMX extension cable for outdoor architectural projectors, L.03 m



AWEXDC1L05
IP67 DMX extension cable for outdoor architectural projectors, L.05 m



AWEXDC1L10
IP67 DMX extension cable for outdoor architectural projectors, L.10 m



AWEXDC1L20
IP67 DMX extension cable for outdoor architectural projectors, L.20 m



AWEXAC1L03
IP67 power extension cable for outdoor architectural projectors, L.03 m



AWEXAC1L05
IP67 power extension cable for outdoor architectural projectors, L.05 m



AWEXAC1L10
IP67 power extension cable for outdoor architectural projectors, L.10 m



AWEXAC1L20
IP67 power extension cable for outdoor architectural projectors, L.2 0m



UPBOXPRO
Firmware uploader kit, USB IN, 5-pin XLR DMX OUT connector

TECHNICAL DRAWINGS

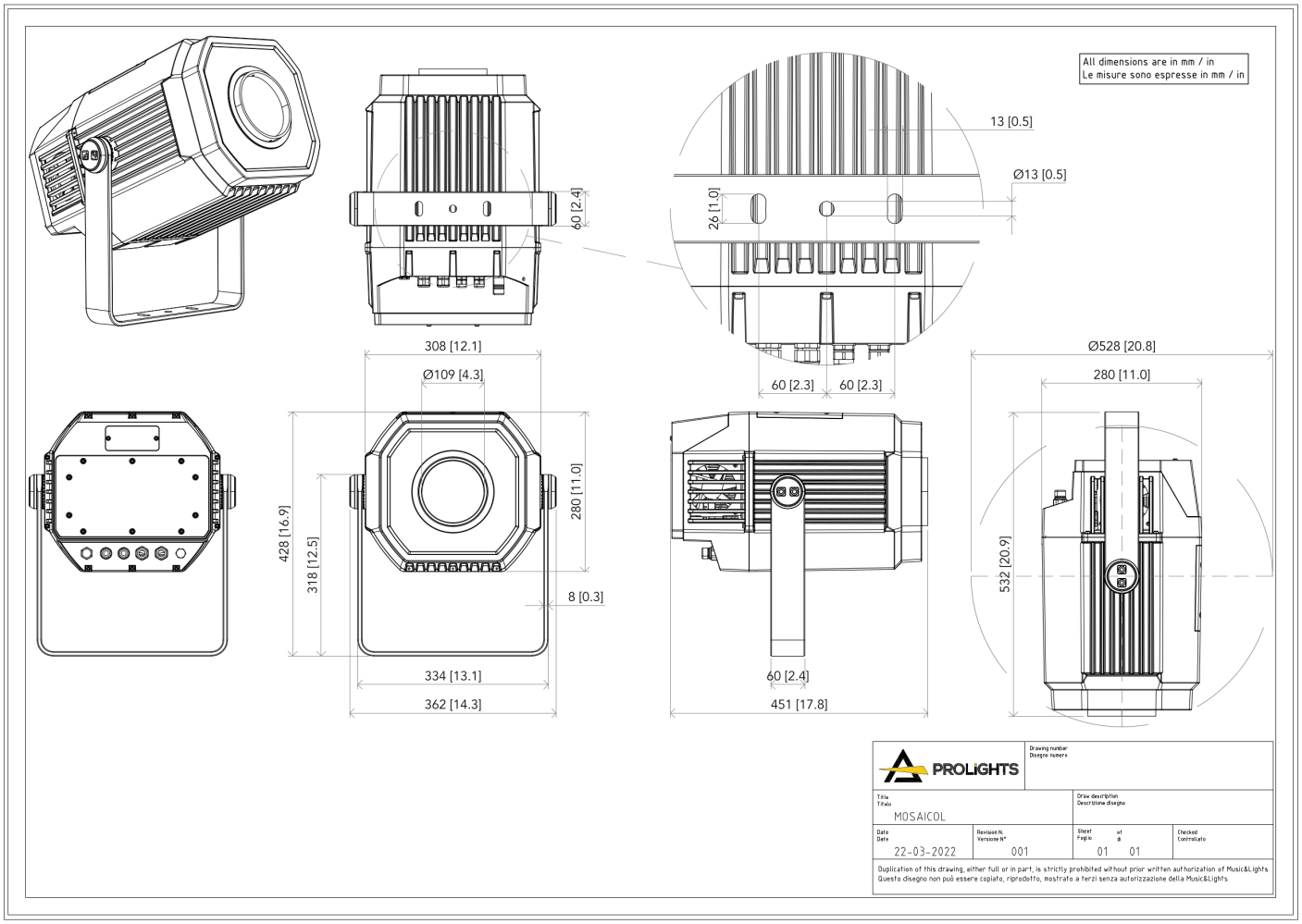

PHOTOMETRICS

Full on - Min Zoom

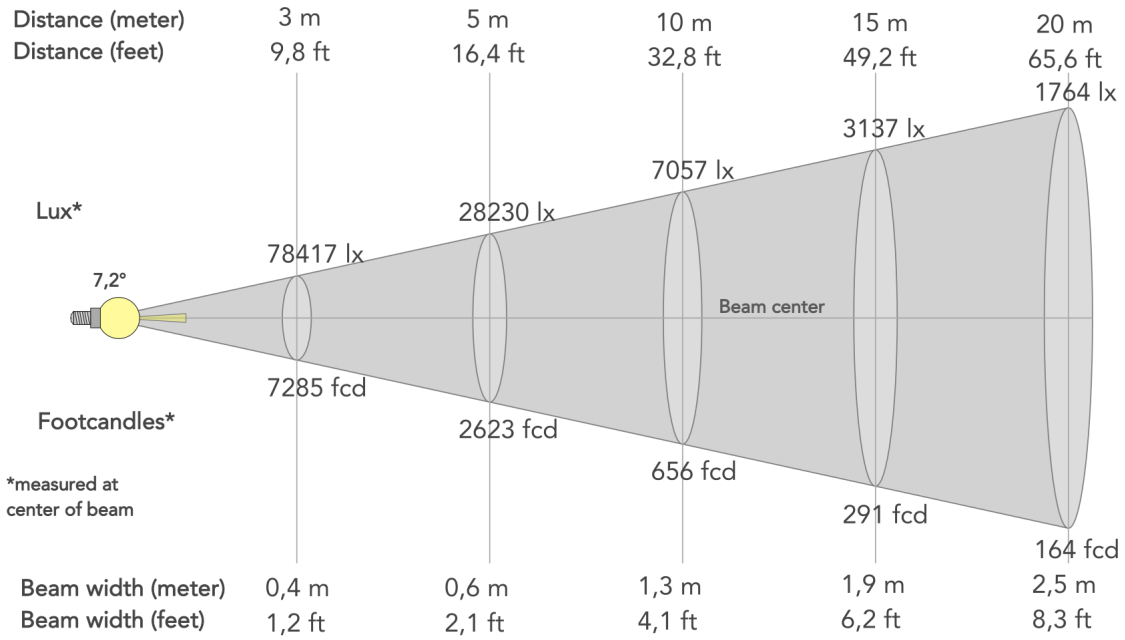

Beam angle (50%): **7.2°**	Field angle (10%): **8.1°**	Cut-off angle (2.5%): **8.3°**

Full on - Max Zoom

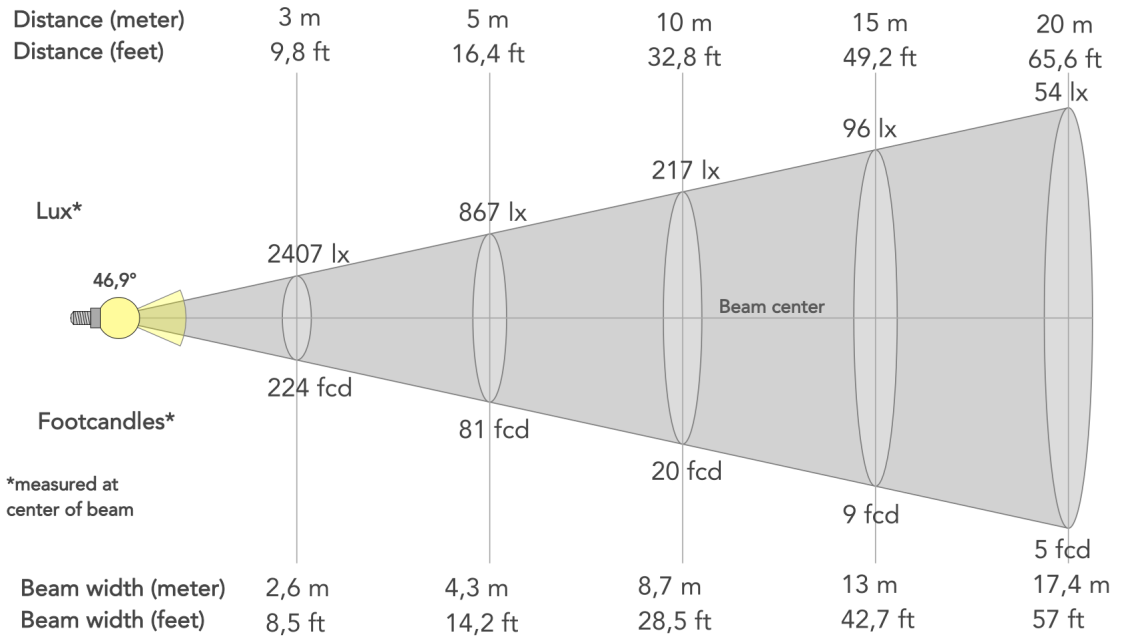

Beam angle (50%): **46.9°**	Field angle (10%): **49.6°**	Cut-off angle (2.5%): **53.3°**