Mosaico XL

ORDER CODE: MOSAICOXL



SOURCE
540W high-power white LED

ZOOM RANGE
6,6° - 50° motorised linear zoom

IP RATING
IP66 for outdoor installations

WEIGHT
37kg / 81.57lbs

LUMINOUS FLUX (MAX)
8'812 lm

TECHNICAL SPECIFICATIONS

LIGHT SOURCE

Source:	540W high-power white LED
Source CCT:	6.000K
Luminous flux:	(6,6°) 8'812 lm - (50°) 14'253
Lux:	(6,6°) 33'138 lx - (50°) 1'138lx @5 m full
Source life expectancy:	> 30.000 hrs (L70B10 @Ta 25° C / 77° F)

OPTICS

Zoom range:	6,6° - 50° motorised linear zoom
Lens diameter:	119mm
Lens type:	high-quality glass lens optics
Focus:	motorised 8/16-bit

COLOUR SYSTEM

Colour mixing:	linear CMY
CCT:	linear CTO correction 3.000 K ~ 6.000 K
Colour wheel:	6 colour filters + open

DYNAMIC EFFECTS

Shutter system:	4 shutter blades with position and ±30° angle adjustment, ±45° rotation of the complete framing system
Animation wheel:	animation wheel with CW and CCW rotation
Circular prism:	4-f with bi-directional rotation, indexing
Frost:	dual soft-edge and heavy
Iris:	5 ~ 100% motorised iris

GOBOS

Gobo wheel 1:	7 rotating gobos + open, interchangeable, indexing
Gobo size (BW):	outer: 26,9 mm - image: 20,5 mm
Gobo size (Color):	outer: 26,9 mm - image: 20,5 mm

CONTROL

Supported Protocols:	DMX512, RDM, W-DMX
DMX channels:	28 / 30 / 35 / 44ch
RDM:	for remote addressing and parameter configuration
Display:	black OLED touch display
Master/Slave:	for synchronised operation of more units linked in a chain

ELECTRONICS

Dimmer:	linear 0 - 100% electronic dimmer
Dimmer curves:	4 selectable dimming modes available
Strobe / shutter:	1 - 30 Hz, electronic
Display battery:	included, self-charging battery backup
Firmware upgrade with:	via DMX with UPBOXPRO/ UPBOX1 (not included)

CONNECTIONS

Power connection:	1,8 m moulded IP power IN/OUT connectors
Signal connection:	1,8 m moulded IP signal IN/OUT connectors
Wireless Connection:	integrated W-DMX receiver
Adaptors:	XLR and BARE END 16A adaptors included

Downloaded on 29/11/2026 - data may be provisional: features, specifications and appearance are subject to change without notice

TECHNICAL SPECIFICATIONS

ELECTRICAL

Mains power supply:	100-240V - 50/60Hz
Max power consumption (230V):	600W
Standby power:	115 W
Power factor:	>0,96

PHYSICAL

IP rating:	IP66 for outdoor installations
IK rating:	IK09 impact rating
Cooling:	forced-air with IP-rated low-noise fan
Housing:	Die-cast aluminium
Finish:	grey (RAL 9006)
Operating temperature:	Ta -20 to +45 °C (-4 to +113 °F)
Dimensions (WxHxD):	403x462x565mm
Weight:	37kg

INSTALLATION

Suspension and fixing:	bracket for hanging and floor positioning
Other:	inspectable cover window for gobos replacement and maintenance and record scenes and create chases and shows throughout these scenes

CERTIFICATIONS / REPORTS

Compliance:	CE, UKCA, RCM, cTUVus, FCC

BOX CONTENT

1 x MOSAICOXL

1 x 0,28 meters 3G1mmq power cable (BARE END - IP connection adapter)

1 x 5p XLR - IP connection male adapter

1 x 5p XLR - IP connection female adapter

Downloaded on 29/11/2026 - data may be provisional: features, specifications and appearance are subject to change without notice

ACCESSORIES & RELATED PRODUCTS



AETHERLINK
IP66 rated 1 Universe CRMX wireless transceiver for permanent outdoor installation



AWEXAC12ADP
Power adapter from AWEXAC1 cable series to AWEXAC2 cable series

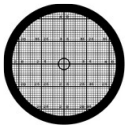

GBVMAP00120F00
Gobo Mapping, F size, black and white (gobo holder included)



AWEXDC1221ADP
Signal adapter kit from AWEXDC1 series to AWEXDC2 series and vice versa



AWEXAC1L03
IP67 power extension cable for outdoor architectural projectors, L.03 m



AWEXAC1L05
IP67 power extension cable for outdoor architectural projectors, L.05 m



AWEXAC1L10
IP67 power extension cable for outdoor architectural projectors, L.10 m



AWEXAC1L20
IP67 power extension cable for outdoor architectural projectors, L.2 0m



AWEXDC1L03
IP67 DMX extension cable for outdoor architectural projectors, L.03 m



AWEXDC1L05
IP67 DMX extension cable for outdoor architectural projectors, L.05 m



AWEXDC1L10
IP67 DMX extension cable for outdoor architectural projectors, L.10 m



AWEXDC1L20
IP67 DMX extension cable for outdoor architectural projectors, L.20 m



UPBOXPRO
Firmware uploader kit, USB IN, 5-pin XLR DMX OUT connector

TECHNICAL DRAWINGS

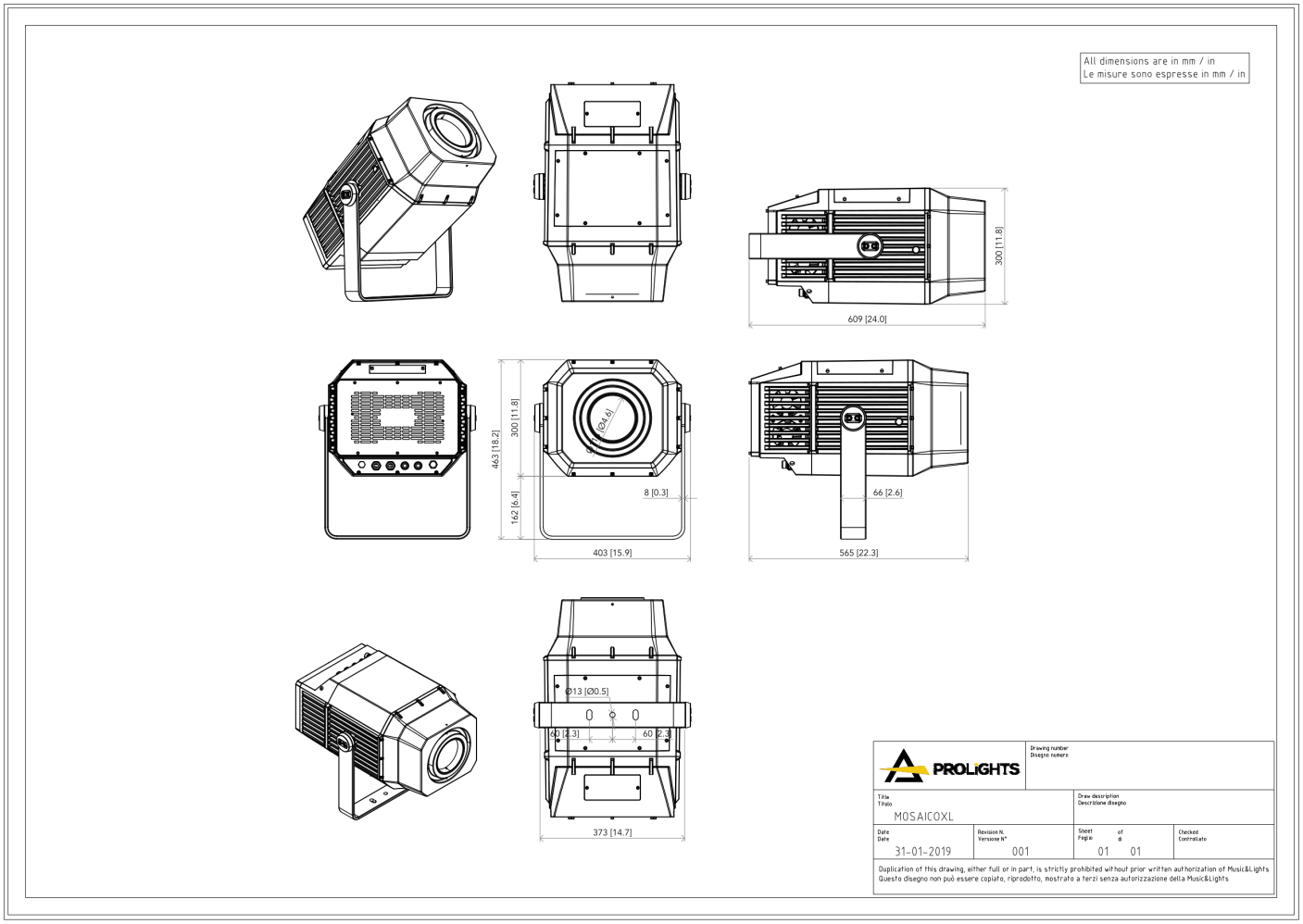

PHOTOMETRICS

Full on - Min Zoom

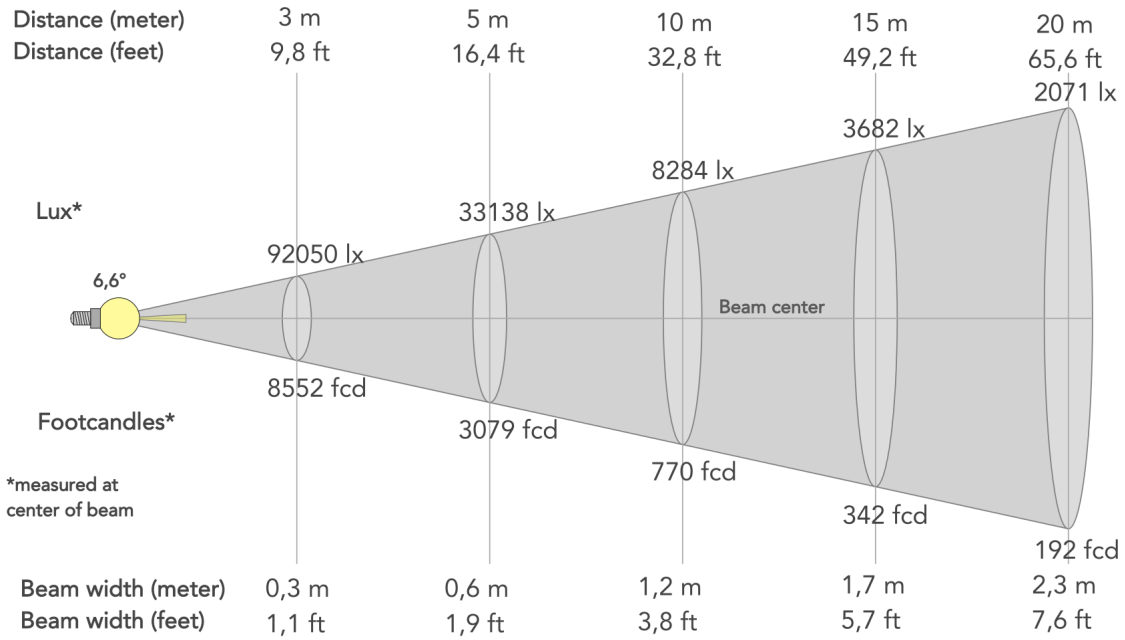

Beam angle (50%): **6.6°**	Field angle (10%): **8.3°**	Cut-off angle (2.5%): **9.5°**

Full on - Max Zoom

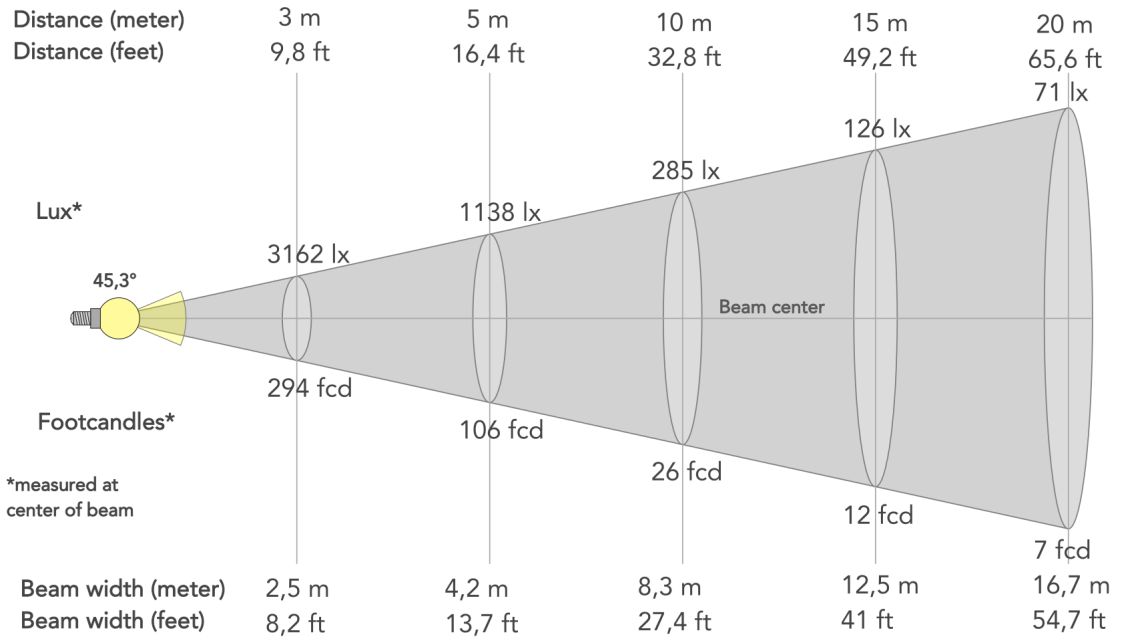

Beam angle (50%): **45.3°**	Field angle (10%): **49.8°**	Cut-off angle (2.5%): **51.1°**