Mosaico XL+

ORDER CODE: MOSAICOXLPLUS



SOURCE
600W high-power white LED

ZOOM RANGE
6,8° - 52,1° motorised linear zoom

IP RATING
IP66 for outdoor installations

WEIGHT
35,5kg / 78.26lbs

LUMINOUS FLUX (MAX)
23'570 lm

Downloaded on 26/11/2026 - data may be provisional: features, specifications and appearance are subject to change without notice

TECHNICAL SPECIFICATIONS

LIGHT SOURCE

Source:	600W high-power white LED
Source CCT:	6.300K
Luminous flux:	(6,8°) 17'404 lm - (52,1°) 23'570 lm @Full
Lux:	(6,8°) 59'962 lx - (52,1°) 1'454lx @5 m full
Source life expectancy:	> 30.000 hrs (L70B10 @Ta 25° C / 77° F)

OPTICS

Zoom range:	6,8° - 52,1° motorised linear zoom
Lens diameter:	135mm
Lens type:	high-quality glass lens optics
Focus:	motorised 8/16-bit

COLOUR SYSTEM

Colour mixing:	linear CMY
CCT:	linear CTO correction 3.000 K ~ 6.000 K
Colour wheel:	open + 6 interchangeable colour filters

DYNAMIC EFFECTS

Shutter system:	4 shutter blades with position and ±30° angle adjustment, ±45° rotation of the complete framing system
Animation wheel:	animation wheel with CW and CCW rotation
Circular prism:	4-f with bi-directional rotation, indexing
Frost:	dual soft-edge and heavy
Iris:	5 ~ 100% motorised iris

GOBOS

Gobo wheel 1:	7 rotating gobos + open, interchangeable, indexing
Gobo size (BW):	outer: 26,9 mm - image: 20,5 mm
Gobo size (Color):	outer: 26,9 mm - image: 20,5 mm

CONTROL

Supported Protocols:	DMX512, RDM, CRMX + WDMX
DMX channels:	28 / 30 / 35 / 44ch
RDM:	for remote addressing and parameter configuration
Display:	black OLED touch display
Stand Alone:	Stand Alone programmer and playback
Master/Slave:	for synchronised operation of more units linked in a chain

ELECTRONICS

Dimmer:	linear 0 - 100% electronic dimmer
Dimmer curves:	4 selectable dimming modes available
Strobe / shutter:	1 - 30 Hz, electronic
Display battery:	included, self-charging battery backup
Selectable PWM:	600 to 40,000 Hz (selectable steps)
Firmware upgrade with:	via DMX with UPBOXPRO/ UPBOX1 (not included)

CONNECTIONS

Power connection:	1,8 m moulded IP power IN/OUT connectors
Signal connection:	1,8 m moulded IP signal IN/OUT connectors
Wireless Connection:	integrated LumenRadio TiMo FX RDM - CRMX and W-DMX compatible
Adaptors:	XLR and BARE END 16A adaptors included

Downloaded on 26/11/2026 - data may be provisional: features, specifications and appearance are subject to change without notice

TECHNICAL SPECIFICATIONS

ELECTRICAL

Mains power supply:	100-240V - 50/60Hz
Max power consumption (230V):	680W
Output (at 230V):	4 units on a single power line
Standby power:	58,7 W
Power factor:	>0,96

PHYSICAL

IP rating:	IP66 for outdoor installations
IK rating:	IK09 impact rating
Cooling:	heat pipe with low-noise fan
Housing:	Sturdy die-cast aluminium body, scratch-resistant C5M Marine Grade paint (as standard)
Finish:	grey (RAL 9006)
Operating temperature:	Ta -20 to +45 °C (-4 to +113 °F)
Dimensions (WxHxD):	403x462x565mm
Weight:	35,5kg

INSTALLATION

Suspension and fixing:	bracket for hanging and floor positioning
Hardware on-board:	anchor points on the front for accessory mounting
Other:	inspectable cover window for gobos replacement and maintenance and record scenes and create chases and shows throughout these scenes

CERTIFICATIONS / REPORTS

Compliance:	CE, RCM, FCC, cTUVus

Downloaded on 26/11/2026 - data may be provisional: features, specifications and appearance are subject to change without notice

ACCESSORIES & RELATED PRODUCTS



MXLPLUSHSNOOT
Half snoot for MOSAICOXLPLUS, RAL 9006, C5M painting



MXLPLUSFSNOOT
Full snoot for MOSAICOXLPLUS, RAL 9006, C5M painting

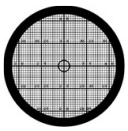

GBVMAP00120F00
Gobo Mapping, F size, black and white (gobo holder included)



AETHERLINK
IP66 rated 1 Universe CRMX wireless transceiver for permanent outdoor installation



AWEXDC1221ADP
Signal adapter kit from AWEXDC1 series to AWEXDC2 series and vice versa



AWEXAC12ADP
Power adapter from AWEXAC1 cable series to AWEXAC2 cable series



AWEXAC1L03
IP67 power extension cable for outdoor architectural projectors, L.03 m



AWEXAC1L05
IP67 power extension cable for outdoor architectural projectors, L.05 m



AWEXAC1L10
IP67 power extension cable for outdoor architectural projectors, L.10 m



AWEXAC1L20
IP67 power extension cable for outdoor architectural projectors, L.2 0m



AWEXDC1L03
IP67 DMX extension cable for outdoor architectural projectors, L.03 m



AWEXDC1L05
IP67 DMX extension cable for outdoor architectural projectors, L.05 m



AWEXDC1L10
IP67 DMX extension cable for outdoor architectural projectors, L.10 m



AWEXDC1L20
IP67 DMX extension cable for outdoor architectural projectors, L.20 m



UPBOXPRO
Firmware uploader kit, USB IN, 5-pin XLR DMX OUT connector

TECHNICAL DRAWINGS

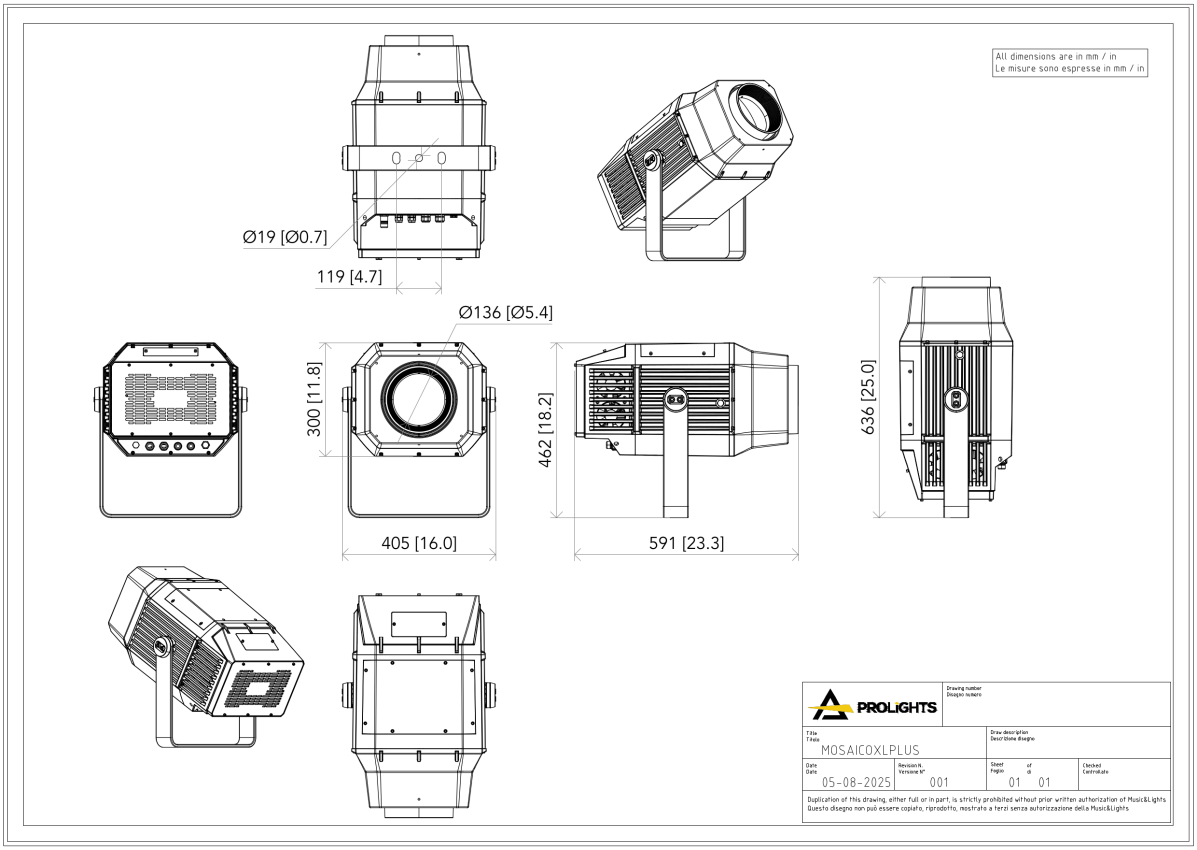

All dimensions are in mm / in
Le misure sono espresse in mm / in

MXLPLUSFSNOOT

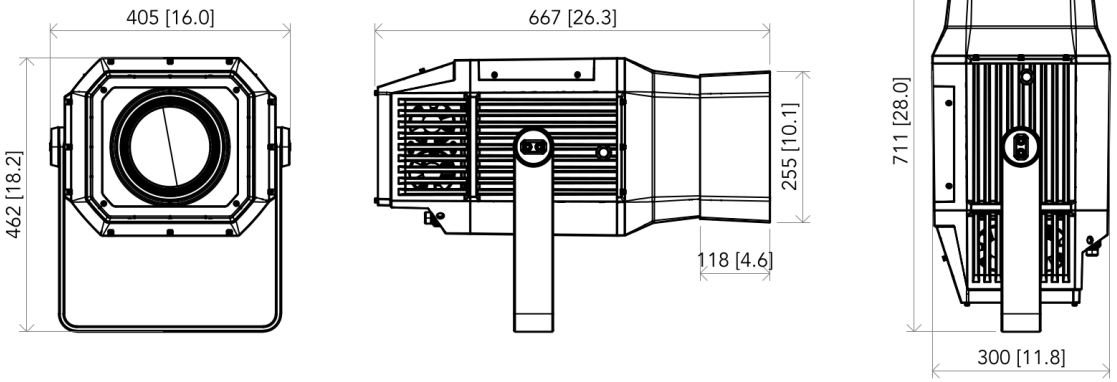

MXLPLUSHSNOOT

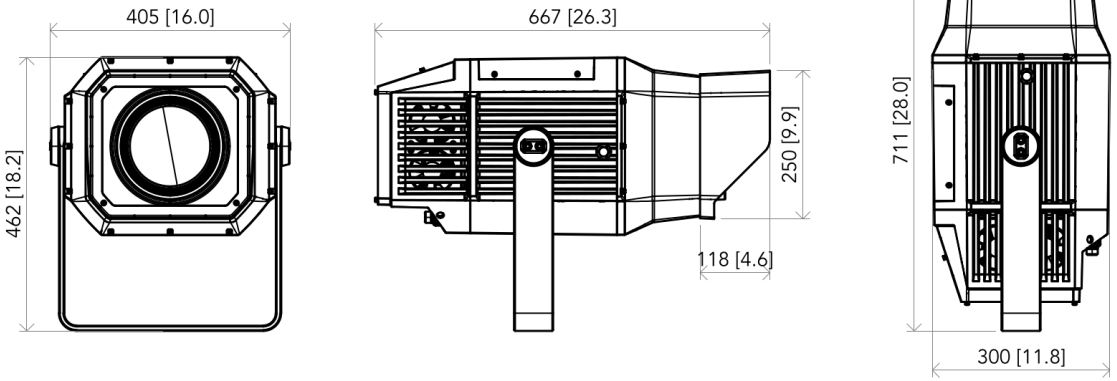

PROLIGHTS		Drawing number / Disegno numero: 01	
Title / Titolo: MOSAICOXLPLUS		Draw description / Descrizione disegno: With accessories	
Date / Date: 06-08-2025	Revision N. / Versione N°: 001	Sheet / Foglio: 01 of / di 01	Checked / Controllato

Duplication of this drawing, either full or in part, is strictly prohibited without prior written authorization of Music&Lights
Questo disegno non può essere copiato, riprodotto, mostrato a terzi senza autorizzazione della Music&Lights

PHOTOMETRICS

Full on - Min Zoom

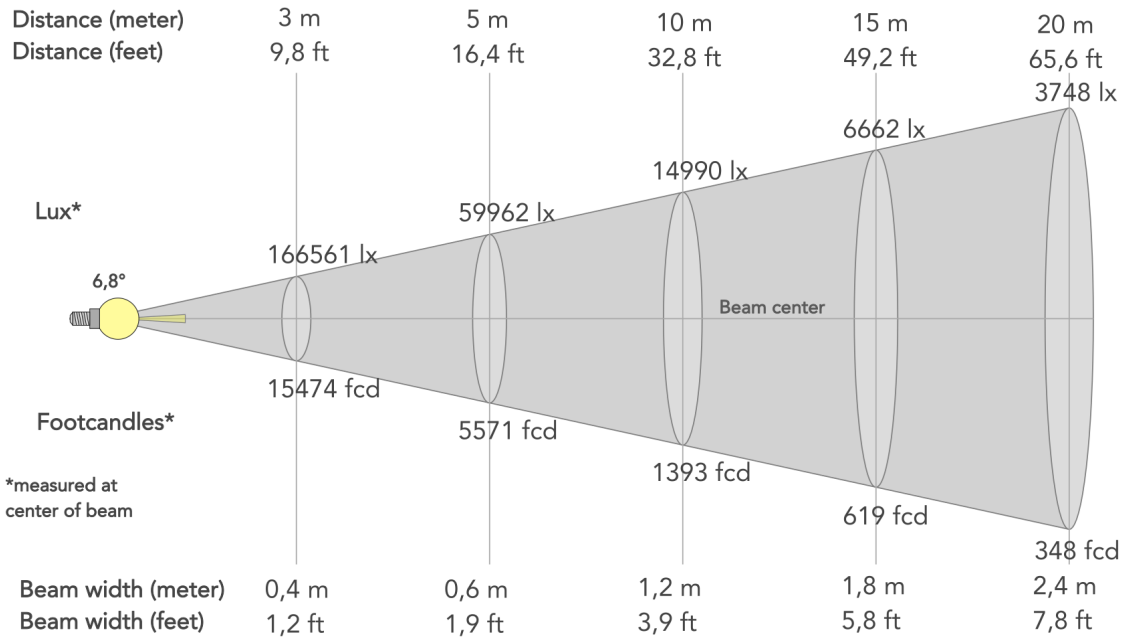

Beam angle (50%): **6.8°**	Field angle (10%): **8.5°**	Cut-off angle (2.5%): **10°**

Full on - Max Zoom

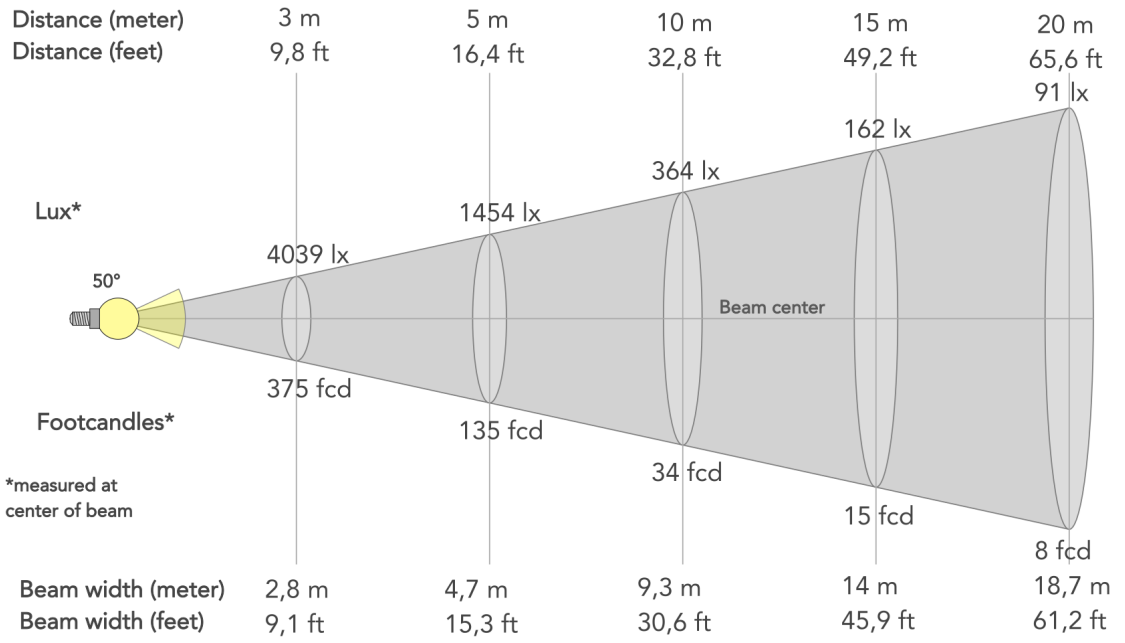

Beam angle (50%): **50°**	Field angle (10%): **52.1°**	Cut-off angle (2.5%): **52.5°**