Muse Profile70CT+ NEW

ORDER CODE: MUSEP70CTP



SOURCE	ZOOM RANGE	IP RATING
1000W 6 colour LEDs source	**6°- 50° motorised linear zoom**	**IP20**

WEIGHT	LUMINOUS FLUX (MAX)	CRI
34kg / 74.96lbs	**21'257 lm**	**98,8 @3.200K**

Downloaded on 29/11/2026 - data may be provisional: features, specifications and appearance are subject to change without notice

TECHNICAL SPECIFICATIONS

LIGHT SOURCE

Source:	1000W 6 colour LEDs source
Luminous flux:	(6°) 14'001 lm - (50°) 21'257 lm @Full
Lux:	(6°) 64'433 lx - (50°) 1'556lx @5 m full
CRI:	98,8 @3.200K; 97,2 @5.600K
R9:	97,1 @3.200K; 96,4 @5.600K
TLCI:	93 @3.200K; 97 @5.600K
TM30 Rf:	95 @3.200K; 94 @5.600K
TM30 Rg:	100 @3.200K; 101 @5.600K
Source life expectancy:	> 50.000 hrs (L70B10 @Ta 25° C / 77° F)

OPTICS

Zoom range:	6°- 50° motorised linear zoom
Lens diameter:	150mm
Lens type:	HD anti-reflection lenses with achromatic coating
Focus:	motorised 16-bit

COLOUR SYSTEM

Spektra OS:	unmatched color precision and consistency
Colour control:	XY, CCT, RGB, CMY, RAW, Gel Filters
CCT:	linear control from 2.200K to 15.000K with color-to-CCT linear crossfade
Tungsten Emulation:	dimming with warm color shift simulation
Tint correction:	± green correction adjustment
Colour wheel:	5 colour filters + open

DYNAMIC EFFECTS

Control Resolution:	16-bit dimmer and color control
Shutter system:	4 shutter blades with position and ±25° angle adjustment, ±60° rotation of the complete framing system
Animation wheel:	animation wheel with CW and CCW rotation
Circular prism:	4-f with bi-directional rotation, indexing
Frost:	linear 0-100% from soft-edge to heavy diffusion
Iris:	5 - 100% motorised iris

GOBOS

Gobo wheel 1:	6 rotating gobos + open, interchangeable, indexing
Gobo size:	26,9 mm outer / 20 mm image / up to 3 mm thickness
Gobo wheel 2:	6 rotating gobos + open, interchangeable, indexing
Gobo size:	26,9 mm outer / 20 mm image / up to 3 mm thickness

CONTROL

Supported Protocols:	DMX512, RDM, ArtNet, sACN (IGMP v2), CRMX
DMX channels:	43 / 48 / 49 / 53ch
RDM:	for remote addressing and parameter configuration
Display:	2.4'' Color display

Downloaded on 29/11/2026 - data may be provisional: features, specifications and appearance are subject to change without notice

TECHNICAL SPECIFICATIONS

MOVEMENT

Pan:	540° - 16-bit resolution
Tilt:	270° - 16-bit resolution
Absolute position:	stationary reset without calibration movement
Position feedback:	automatic repositioning after external movement
Pan / tilt lock:	for transport and maintenance

ELECTRONICS

Dimmer:	linear 0 - 100% electronic dimmer
Dimmer curves:	5 selectable dimming modes available
Strobe / shutter:	1-30 Hz, electronic
Display battery:	optional, self-charging battery backup
Selectable PWM:	600 to 50,000 Hz (selectable steps)
Firmware upgrade with:	via DMX with UPBOXPRO (not included) or via Ethernet with DMX-Workshop

CONNECTIONS

Power connection:	Neutrik powerCON TRUE1 IN connector
Signal connection:	Amphenol XLR 5p IN/OUT connectors
Wireless Connection:	integrated LumenRadio TiMo FX RDM - CRMX and W-DMX compatible
Data connection:	Amphenol RJ45 IN/OUT
EtherFlow:	Ethernet pass-through switch that preserves network connectivity even when the fixture is unpowered
Data:	USB-A for firmware updates

ELECTRICAL

Mains power supply:	100-240V - 50/60Hz
Max power consumption (230V):	1400W
Standby power:	154,5 W
Power factor:	> 0.95

CERTIFICATIONS / REPORTS

Compliance:	CE, RCM, FCC, cTUVus

PHYSICAL

IP rating:	IP20
Cooling:	heat pipe with low-noise fan
Housing:	Aluminium structure with high-resistance polycarbonate cover
Finish:	black
Operating temperature:	Ta -10 to +45 °C (+14 to +113 °F)
Dimensions (WxHxD):	416 x 730 x 331mm
Weight:	34kg

INSTALLATION

Hardware on-board:	anchor points on the front for accessory mounting
Transportation:	carrying handles on the base and additional retractable carrying handles on the arms

BOX CONTENT

1 x MUSEP70CTP

2 x OS25PLUS

1 x 1,5 meters 3G1,5mmq power cable (BARE END - NEUTRIK POWERCON TRUE1 IP65)

Downloaded on 29/11/2026 - data may be provisional: features, specifications and appearance are subject to change without notice

ACCESSORIES & RELATED PRODUCTS



FCLMUSEP70
Flight case for 2 pcs of MUSEP70CTP



MP70FF
Holder and filter frame for MUSEP70CTP



OS25PLUS
Quick-lock omega bracket, M12 hole



AETHERBOXONE
IP65 1x universe CRMX transceiver, DMX, Ethernet protocols, Wi-Fi, Bluetooth, battery-ready, POE



UPBOXPRO
Firmware uploader kit, USB IN, 5-pin XLR DMX OUT connector

TECHNICAL DRAWINGS

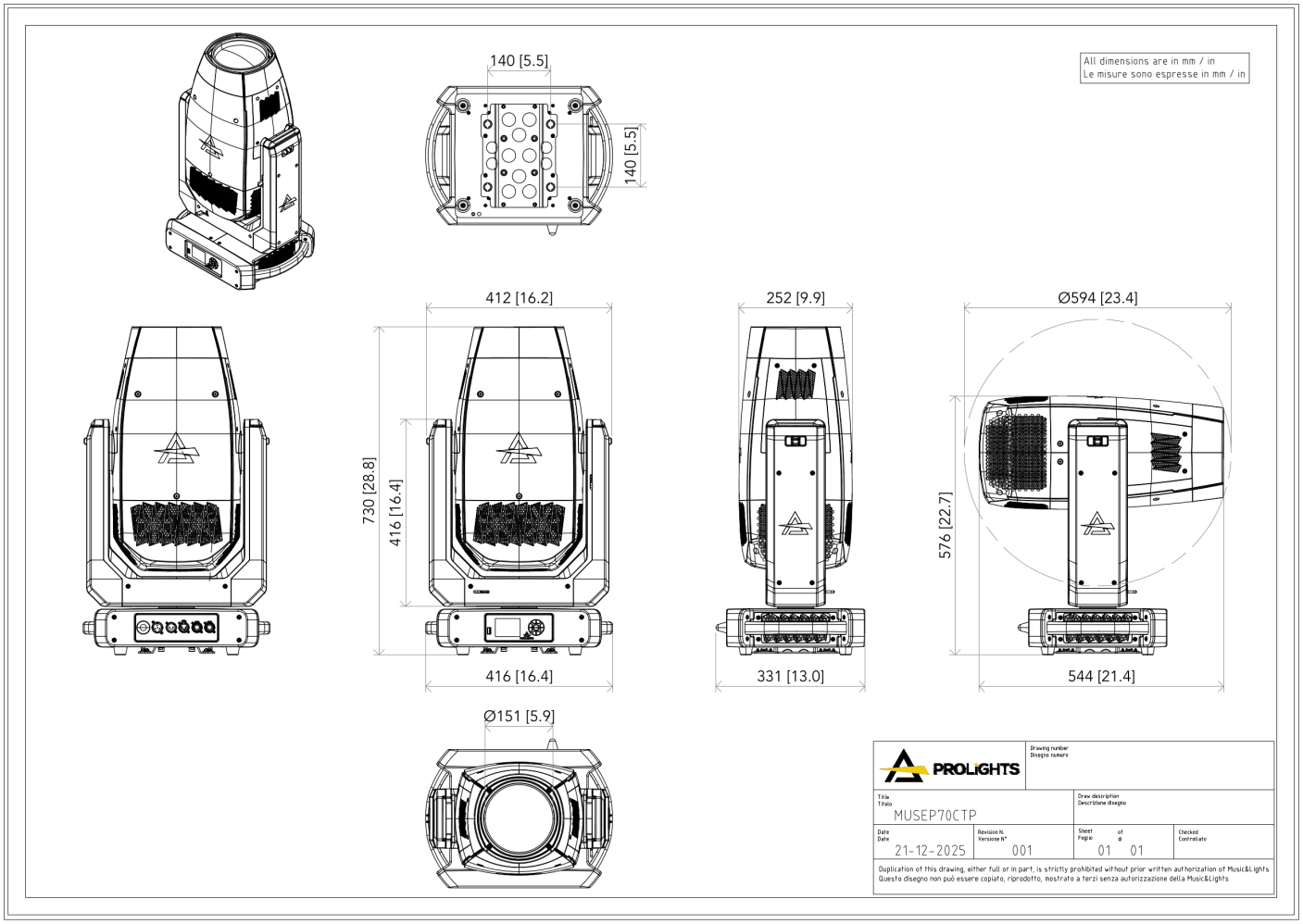

PHOTOMETRICS

Full On HB - Min Zoom

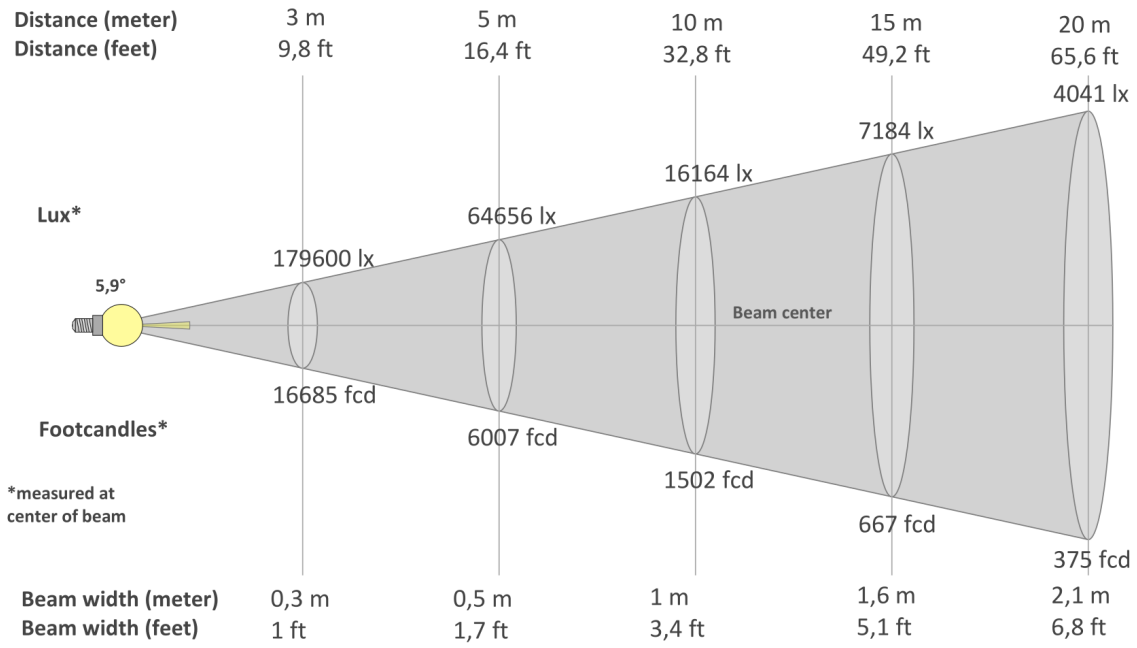

Beam angle (50%): **5.9°**	Field angle (10%): **6.4°**	Cut-off angle (2.5%): **6.5°**

Full On - HB - Max Zoom

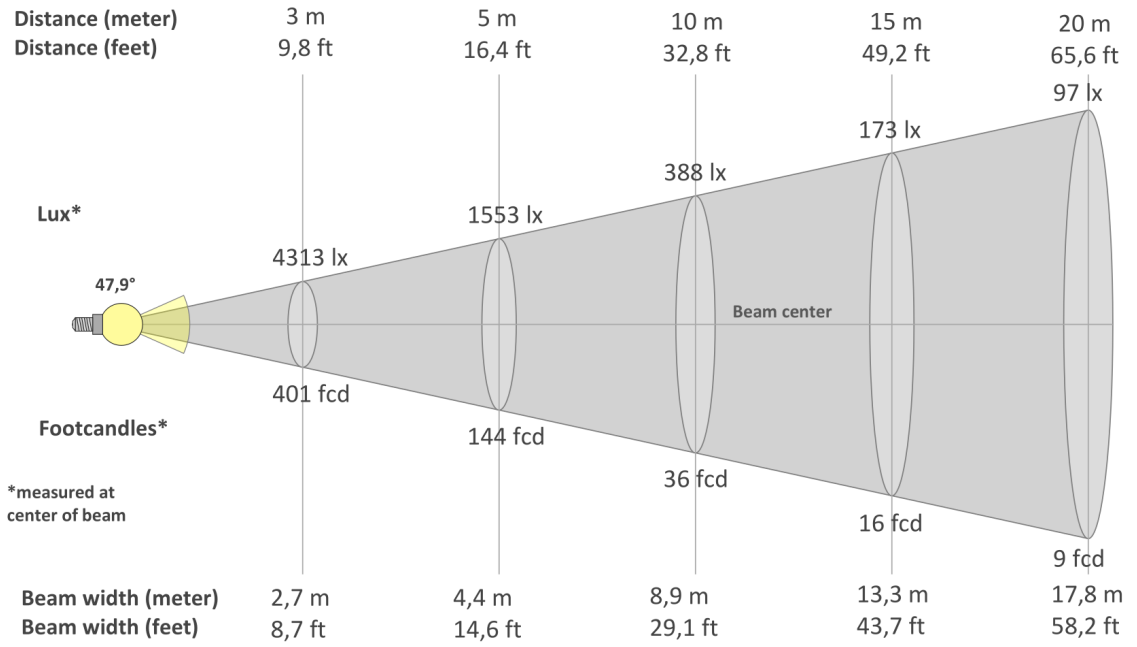

Beam angle (50%): **47.9°**	Field angle (10%): **49.4°**	Cut-off angle (2.5%): **50.6°**