Mxlplushsnoot

ORDER CODE: MXLPLUSHSNOOT

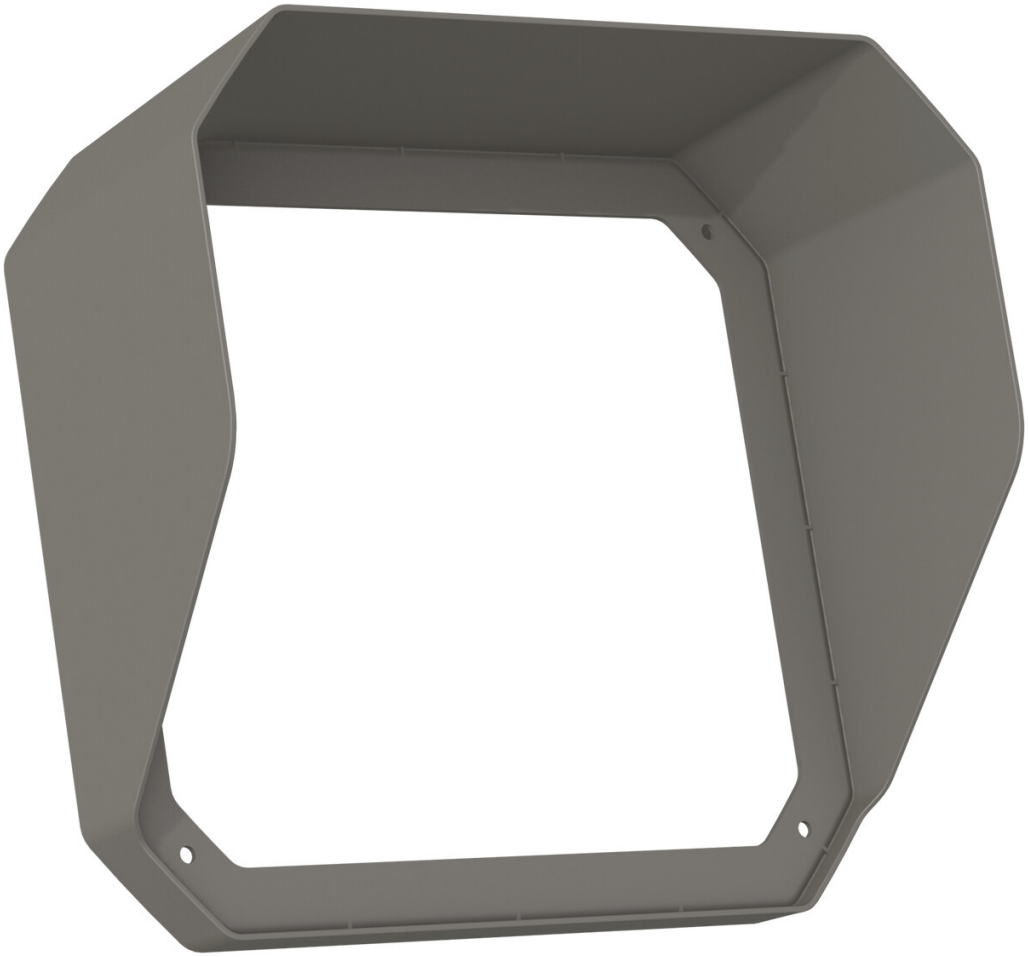

TECHNICAL DRAWINGS

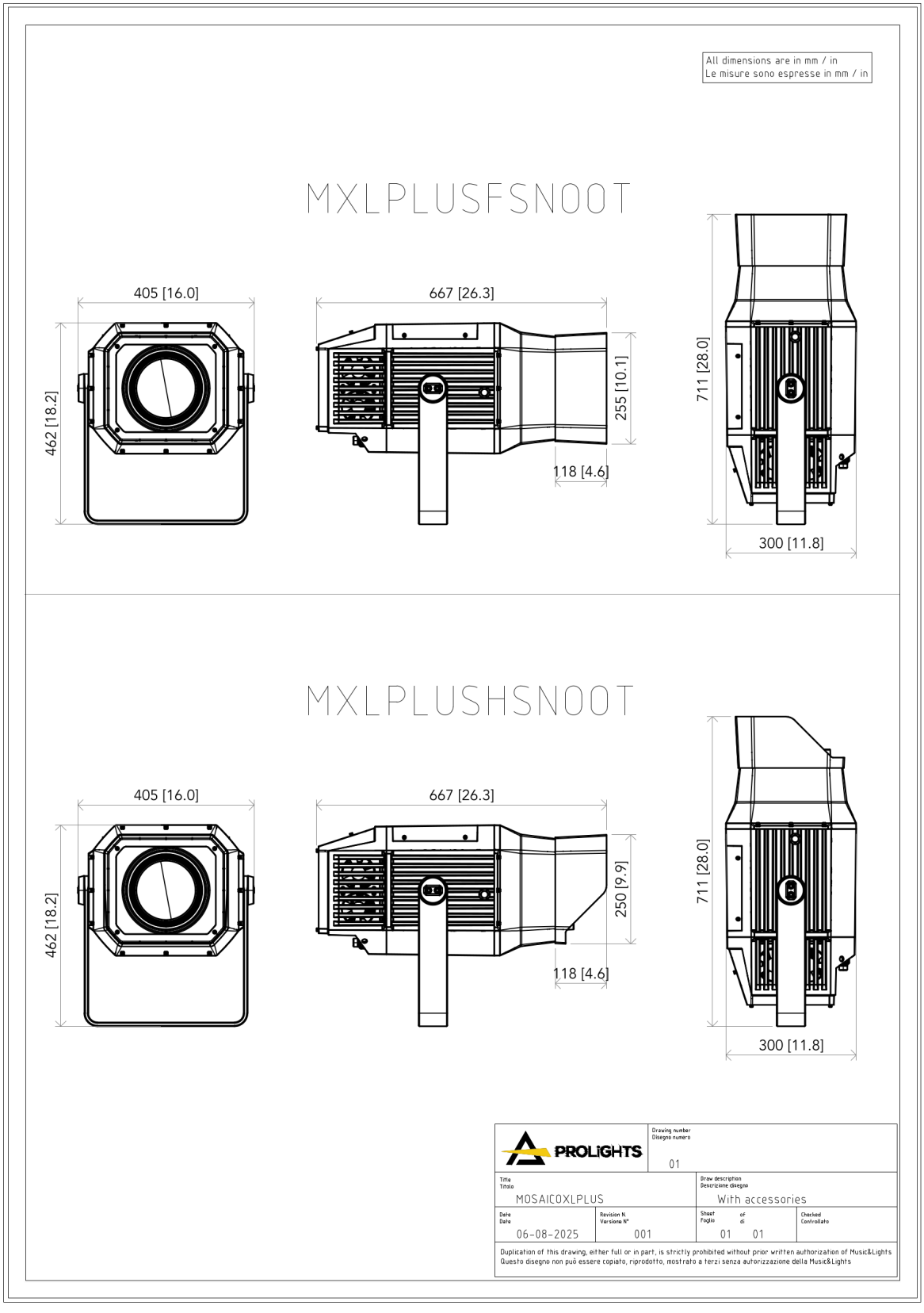

Downloaded on 28/11/2026 - data may be provisional: features, specifications and appearance are subject to change without notice