PanoramaIP WBX

ORDER CODE: PANORAMAIPWBX



SOURCE

19x40W RGBW Osram Ostar LEDs

ZOOM RANGE

4,5° - 36° motorised linear zoom

IP RATING

IP65 for temporary outdoor use

WEIGHT

35kg / 77.16lbs

LUMINOUS FLUX (MAX)

4'452 lm

Downloaded on 26/11/2026 - data may be provisional: features, specifications and appearance are subject to change without notice

TECHNICAL SPECIFICATIONS

LIGHT SOURCE

Source:	19x40W RGBW Osram Ostar LEDs
Luminous flux:	(4,5°) 4'452 lm - (36°) 5'803 @Full
Lux:	(4,5°) 33'893 lx - (36°) 1'764lx @5 m full
Other:	outer RGB, pixel ring with frost film
Source life expectancy:	> 50.000 h

OPTICS

Zoom range:	4,5° - 36° motorised linear zoom
Lens type:	high-quality glass lens optics
Additional optics:	diffuser on outer pixel ring

COLOUR SYSTEM

CCT:	CCT control through dedicated DMX channel
White presets:	2.000 K - 10.000K
Colour wheel:	virtual colour wheel with macros
Macros:	several pre-built pixel macros with adjustable speed

DYNAMIC EFFECTS

Pixel patterns:	pre-programmed static and dynamic pixel patterns
FX generator:	adjustable foreground/background colour, index, speed, direction
Special features:	outer RGB, pixel ring with several built in FX macros

CONTROL

Supported Protocols:	DMX512, RDM, Art-Net, W-DMX
DMX channels:	V1: 18 / 42 / 44 / 120 - V2: 18 / 42 / 44 / 120ch
Pixel control:	pixel2pixel control
RDM:	for remote addressing and parameter configuration
Display:	LCD high resolution colour display with autoflip
Hibernation:	power safe mode when lost DMX
Master/Slave:	for synchronised operation of more units linked in a chain

MOVEMENT

Pan:	540° - 630° - 16-bit resolution
Tilt:	267° - 16-bit resolution
Position feedback:	automatic repositioning after external movement

ELECTRONICS

Dimmer:	linear 0 - 100% electronic dimmer
Strobe / shutter:	1 - 30 Hz, electronic
Display battery:	included, self-charging battery backup
Firmware upgrade with:	via DMX with UPBOXPRO/ UPBOX2 (not included)

CONNECTIONS

Power connection:	Neutrik powerCON TRUE1 IN connector
Signal connection:	Seetronic XLR 5p IN/OUT connectors
Wireless Connection:	integrated W-DMX receiver
Data connection:	Art-Net RJ45 IN/OUT

ELECTRICAL

Mains power supply:	100-240V - 50/60Hz
Max power consumption (230V):	650W
Output (at 230V):	4 units on a single power line
Standby power:	41W
Power factor:	> 0,95

Downloaded on 26/11/2026 - data may be provisional: features, specifications and appearance are subject to change without notice

TECHNICAL SPECIFICATIONS

PHYSICAL

IP rating:	IP65 for temporary outdoor use
Cooling:	heat pipe with low-noise fan
Housing:	Weatherproof IP65 construction
Finish:	black
Operating temperature:	Ta -20 to +40 °C (-4 to +104 °F)
Dimensions (WxHxD):	531x676x326mm
Weight:	35kg

BOX CONTENT

1 x PANORAMAIPWBX

2 x OSIPPLUS

1 x Antenna

1 x 1,5 meters 3G1,5mmq power cable (BARE END - SEETRONIC POWERCON TRUE1 IP65 power connector)

INSTALLATION

Suspension and fixing:	any position with quick-lock Omega brackets

CERTIFICATIONS / REPORTS

Compliance:	CE, UKCA, RCM

ACCESSORIES & RELATED PRODUCTS



OSIPPLUS

IP65 quick-lock omega bracket compatible with IP65 moving heads, M12 hole



FCLPIPWBX

Flight case for 2pcs of PANORAMAIPWBX



UPBOXPRO

Firmware uploader kit, USB IN, 5-pin XLR DMX OUT connector



AETHERBOXONE

IP65 1x universe CRMX transceiver, DMX, Ethernet protocols, Wi-Fi, Bluetooth, battery-ready, POE



OSIPD13

IP65 quick-lock omega bracket compatible with IP65 moving heads, M12 hole

TECHNICAL DRAWINGS

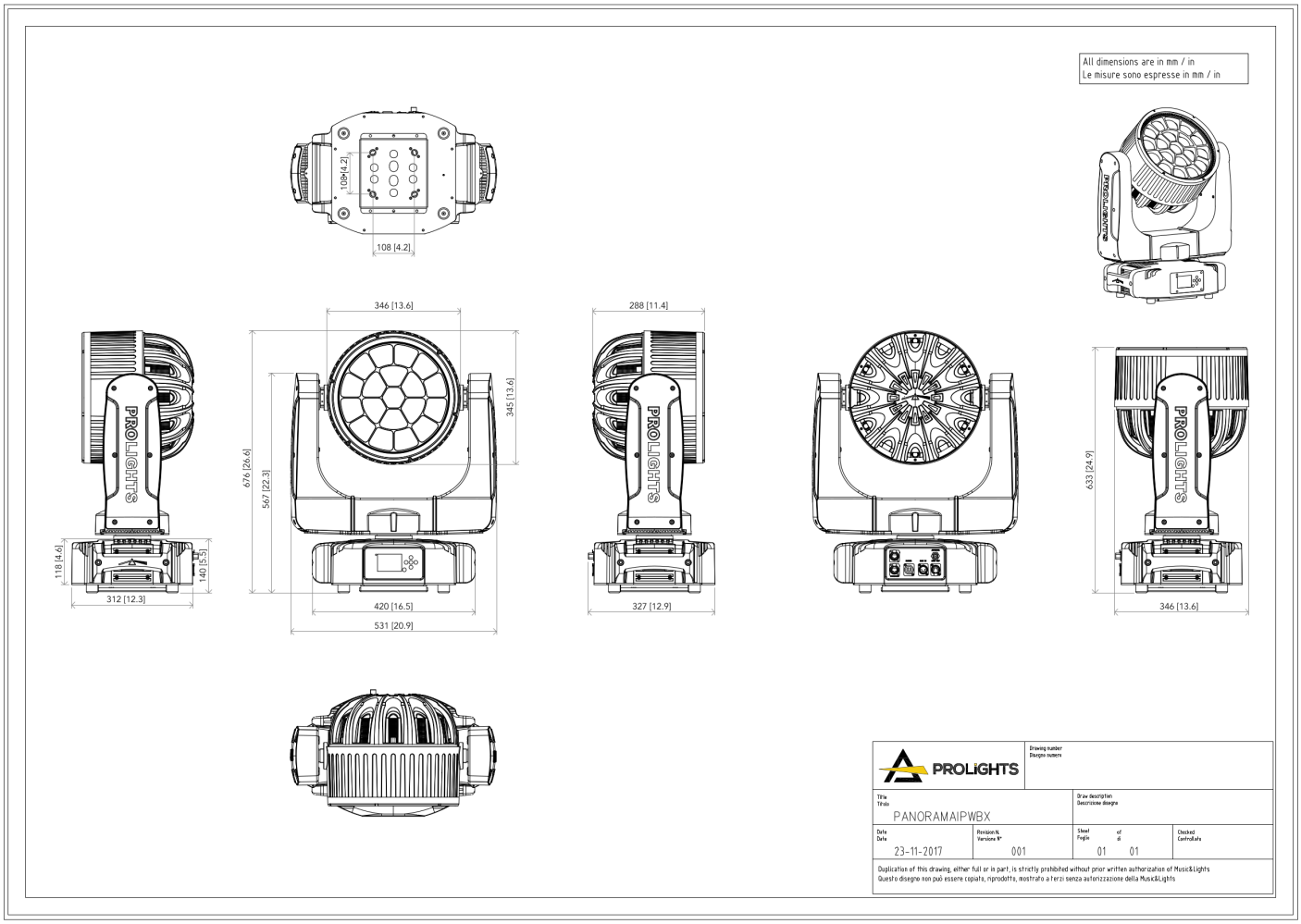

PHOTOMETRICS

Full on - Min Zoom

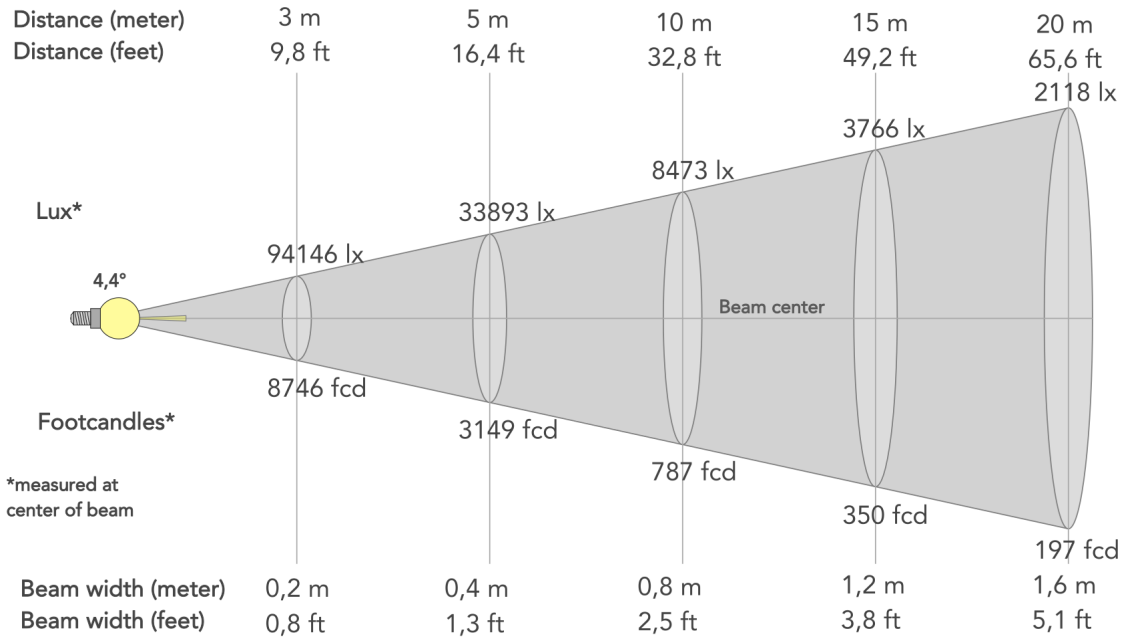

Beam angle (50%): **4.4°**	Field angle (10%): **6.5°**	Cut-off angle (2.5%): **7.3°**

Full on - Max Zoom

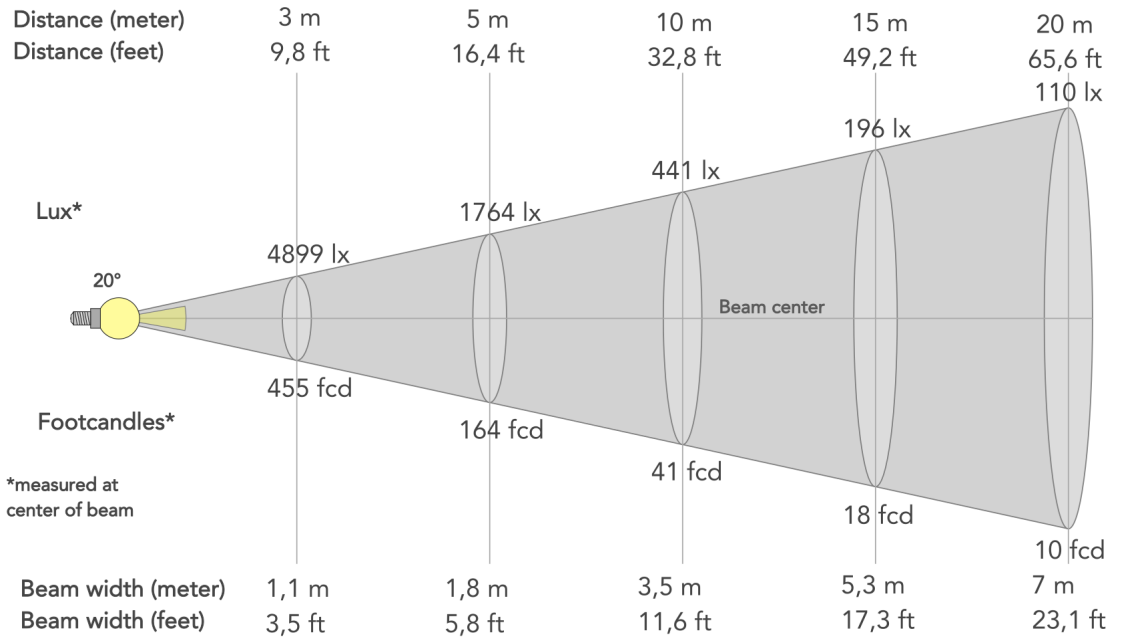

Beam angle (50%): **20°**	Field angle (10%): **36.3°**	Cut-off angle (2.5%): **42.5°**

MUSIC & LIGHTS S.r.l. | Via A. Olivetti, snc
04026 - Minturno (LT) ITALY | info@prolights.it
Tel: +39 0771 72190 | **prolights.it**
VAT No. IT 02057590594

Downloaded on 26/11/2026 - data may be provisional: features, specifications and appearance are subject to change without notice