Pixie Wash

ORDER CODE: PIXIEWASHBK



VERSIONS

	Code	Housing
	**PIXIEWASHBK**	**Black**
	PIXIEWASHWH	White

SOURCE
60W RGBW Osram Ostar LED

ZOOM RANGE
7° - 40° motorised linear zoom

IP RATING
IP20

WEIGHT
7kg / 15.43lbs

LUMINOUS FLUX (MAX)
1'432 lm

Downloaded on 26/11/2026 - data may be provisional: features, specifications and appearance are subject to change without notice

TECHNICAL SPECIFICATIONS

LIGHT SOURCE

Source:	60W RGBW Osram Ostar LED
Luminous flux:	(7°) 1'432 lm - (40°) 1'311 @Full
Lux:	(7°) 3'808 lx - (40°) 296lx @5 m full
Source life expectancy:	> 50.000 hrs (L70B10 @Ta 25° C / 77° F)

OPTICS

Zoom range:	7° - 40° motorised linear zoom
Lens diameter:	100mm
Lens type:	high-quality glass lens optics

COLOUR SYSTEM

CCT:	CCT control through dedicated DMX channel
White presets:	2.700 K ~ 8.000K
Colour wheel:	virtual colour wheel with macros

DYNAMIC EFFECTS

Auto mode:	built-in programs with execution speed adjustment

CONTROL

Supported Protocols:	DMX512
DMX channels:	13 / 16ch
Display:	Graphic User Interface
Master/Slave:	for synchronised operation of more units linked in a chain

MOVEMENT

Pan:	540° - 16-bit resolution
Tilt:	270° - 16-bit resolution
Position feedback:	automatic repositioning after external movement

ELECTRONICS

Dimmer:	linear 0 - 100% electronic dimmer
Dimmer curves:	4 selectable dimming modes available
Strobe / shutter:	1 - 30 Hz, electronic
Display battery:	included, self-charging battery backup
Firmware upgrade with:	via DMX with UPBOXPRO/ UPBOX1 (not included)

CONNECTIONS

Power connection:	Neutrik powerCON IN/OUT connectors
Signal connection:	XLR 5p IN/OUT connectors

INSTALLATION

Suspension and fixing:	any position with quick-lock Omega brackets

ELECTRICAL

Mains power supply:	100-240V - 50/60Hz
Max power consumption (230V):	112W
Output (at 230V):	18 units on a single power line

PHYSICAL

IP rating:	IP20
Cooling:	forced-air with low-noise fan
Housing:	Aluminium structure with high-resistance polycarbonate cover
Finish:	black or white finishing
Operating temperature:	Ta -10 to +45 °C (+14 to +113 °F)
Dimensions (WxHxD):	253x329x205mm
Weight:	7kg

Downloaded on 26/11/2026 - data may be provisional: features, specifications and appearance are subject to change without notice

TECHNICAL SPECIFICATIONS

CERTIFICATIONS / REPORTS

Compliance:	CE, RCM

BOX CONTENT

1 x PIXIEWASH

1 x OS24PLUS

1 x 1,5 meters 3G1,5mmq power cable (BARE END - NEUTRIK POWERCON power connector)

ACCESSORIES & RELATED PRODUCTS



OS24PLUS

Quick-lock omega bracket, M12 hole



FCLPIXIESW

Flight case for 6 PIXIEWASH, PIXIESPOT



UPBOXPRO

Firmware uploader kit, USB IN, 5-pin XLR DMX OUT connector

TECHNICAL DRAWINGS

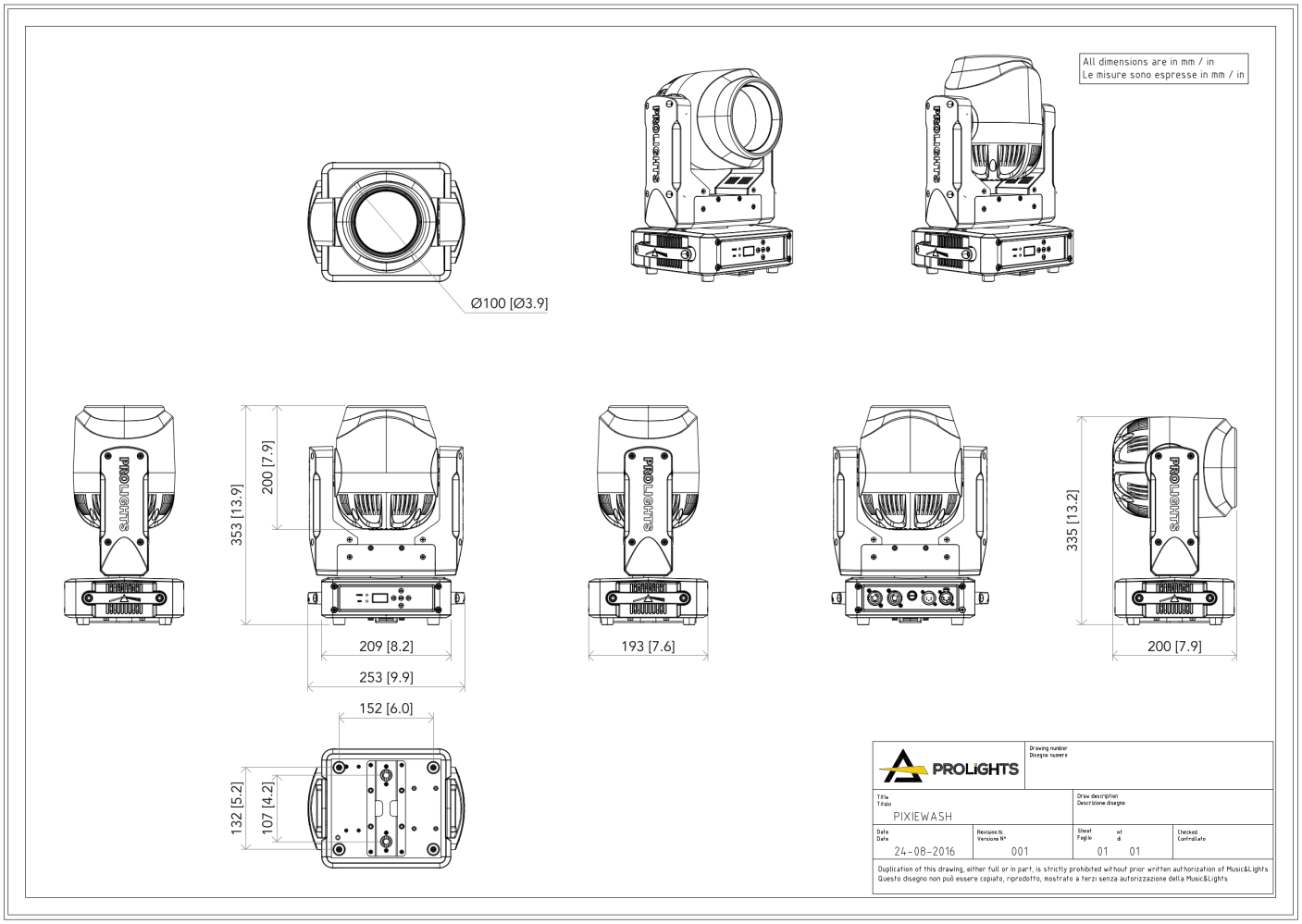

PHOTOMETRICS

Beam angle 50%	Field angle 10%	Cut off angle 2,5%	Intensity ratio in 120° cone	Intensity ratio in 90° cone
7,2°	11,9°	13,8°	98,9%	98,7%

