Pixie WashXB

ORDER CODE: PIXIEWASHXB



SOURCE	ZOOM RANGE	IP RATING
280W RGB + Warm White LED	**7,6° - 43° motorised linear zoom**	**IP20**

WEIGHT	LUMINOUS FLUX (MAX)	CRI
13,6kg / 29.98lbs	**2'888 lm**	**96 @3.200 K**

Downloaded on 26/11/2026 - data may be provisional: features, specifications and appearance are subject to change without notice

TECHNICAL SPECIFICATIONS

LIGHT SOURCE

Source:	280W RGB + Warm White LED
Source CCT:	@full 6.000K
Luminous flux:	(7,6°) 2'888 lm - (43°) 3'038 @Full
Lux:	(7,6°) 6'631 lx - (43°) 532lx @5 m full
CRI:	96 @3.200 K; 93 @5.600 K
R9:	92 @3.200 K; 92,7 @5.600 K
TLCI:	84 @3.200 K; 84 @5.600 K
TM30 Rf:	91 @3.200 K; 91 @5.600 K
TM30 Rg:	104 @3.200 K; 105 @5.600 K
Source life expectancy:	> 30.000 h

OPTICS

Zoom range:	7,6° - 43° motorised linear zoom
Lens diameter:	125mm
Lens type:	high-quality glass lens optics

COLOUR SYSTEM

CCT:	CCT control, + / - green correction, tungsten emulation
White presets:	2.800 K - 8.000K
Colour wheel:	virtual colour wheel with macros
Macros:	several pre-built macros with adjustable speed

DYNAMIC EFFECTS

Special features:	linear crossfade channel from any white to any colour; virtual CTO on colours

CONTROL

Supported Protocols:	DMX512, RDM, Art-Net, W-DMX
DMX channels:	13 / 15 / 16 / 18 / 22 / 23 / 27ch
RDM:	for remote addressing and parameter configuration
Display:	LCD high resolution colour display with autoflip

MOVEMENT

Pan:	540° - 16-bit resolution
Tilt:	250° - 16-bit resolution
Position feedback:	automatic repositioning after external movement

ELECTRONICS

Dimmer:	linear 0 - 100% electronic dimmer
Dimmer curves:	selectable dimming modes available
Strobe / shutter:	1 - 30 Hz, electronic
Display battery:	included, self-charging battery backup
Firmware upgrade with:	via DMX with UPBOXPRO/ UPBOX1 (not included)

CONNECTIONS

Power connection:	Seetronic powerCON waterproof IN/OUT connectors
Signal connection:	Amphenol XLR 5p IN/OUT connectors
Wireless Connection:	integrated LumenRadio TiMo FX RDM - CRMX and W-DMX compatible
Data connection:	Art-Net RJ45 IN/OUT

ELECTRICAL

Mains power supply:	100-240V - 50/60Hz
Max power consumption (230V):	240W
Output (at 230V):	10 units on a single power line
Power factor:	>0,95

Downloaded on 26/11/2026 - data may be provisional: features, specifications and appearance are subject to change without notice

TECHNICAL SPECIFICATIONS

PHYSICAL

IP rating:	IP20
Cooling:	heat pipe with low-noise fan
Housing:	Die-cast aluminium
Finish:	black
Operating temperature:	Ta -10 to +45 °C (+14 to +113 °F)
Dimensions (WxHxD):	308x448x230mm
Weight:	13,6kg

INSTALLATION

Suspension and fixing:	any position with quick-lock Omega brackets
Mounting points:	quick-lock Omega sockets

CERTIFICATIONS / REPORTS

Compliance:	CE, UKCA, RCM, cTUVus, FCC

BOX CONTENT

1 x PIXIEWASHXB

1 x 1,5 meters 3G1,5mmq power cable (BARE END - SEETRONIC POWERCON TRUE1 IP65 power connector)

2 x OS24PLUS

ACCESSORIES & RELATED PRODUCTS



OS24PLUS
Quick-lock omega bracket, M12 hole



AETHERBOXONE
IP65 1x universe CRMX transceiver, DMX, Ethernet protocols, Wi-Fi, Bluetooth, battery-ready, POE



FCLPIXIEWASHXB
Flight case for 4 pcs of PIXIEWASHXB



UPBOXPRO
Firmware uploader kit, USB IN, 5-pin XLR DMX OUT connector

Downloaded on 26/11/2026 - data may be provisional: features, specifications and appearance are subject to change without notice

TECHNICAL DRAWINGS

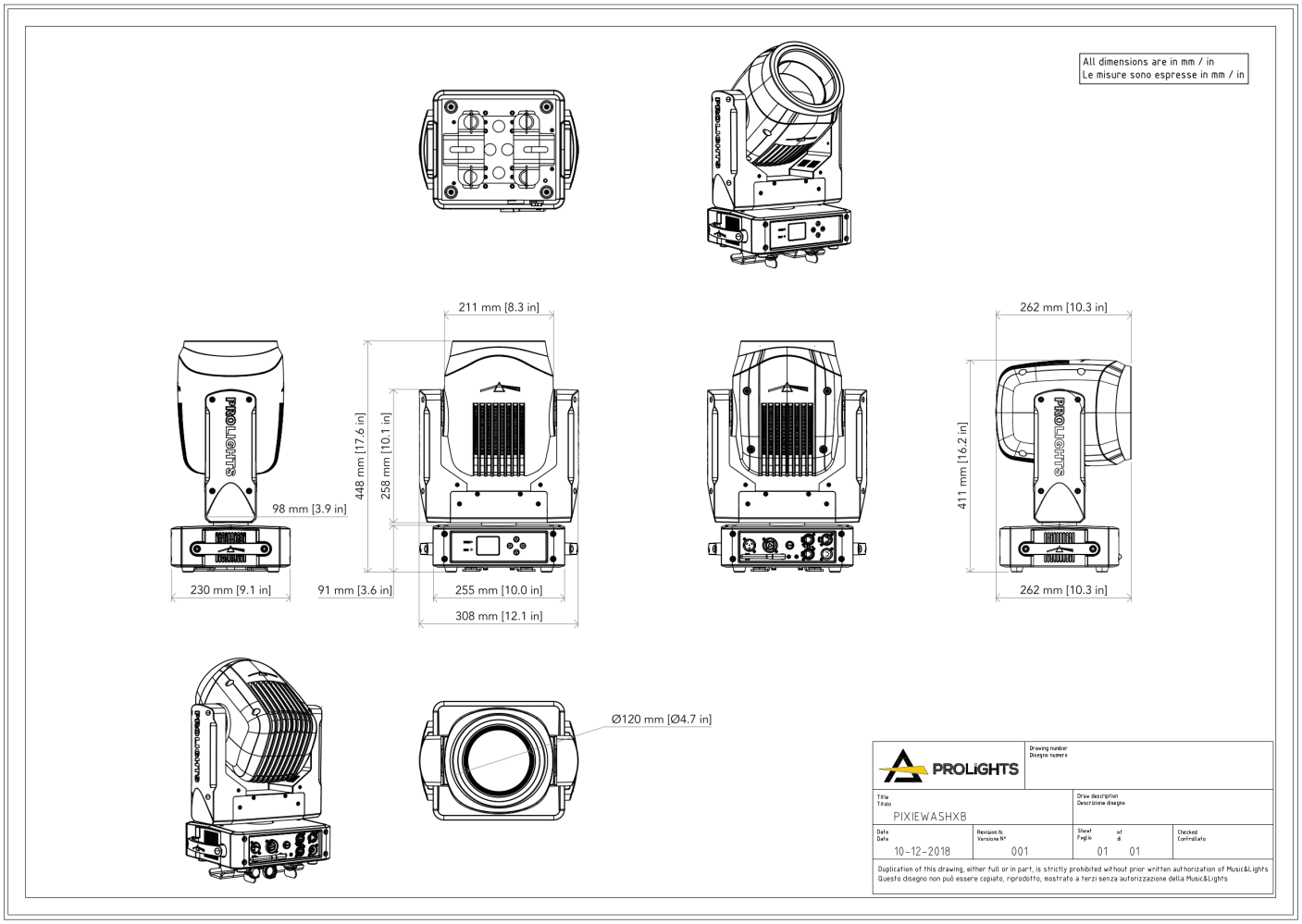

PHOTOMETRICS

Full On - Min Zoom

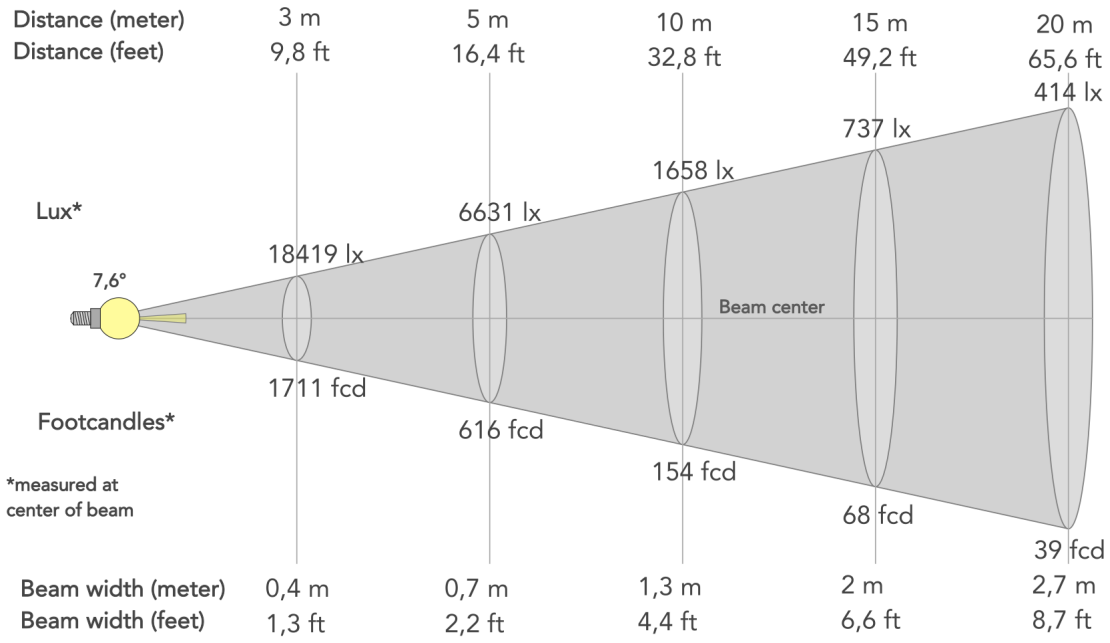

Beam angle (50%): **7.6°**	Field angle (10%): **12.9°**	Cut-off angle (2.5%): **14.6°**

Full On - Max Zoom

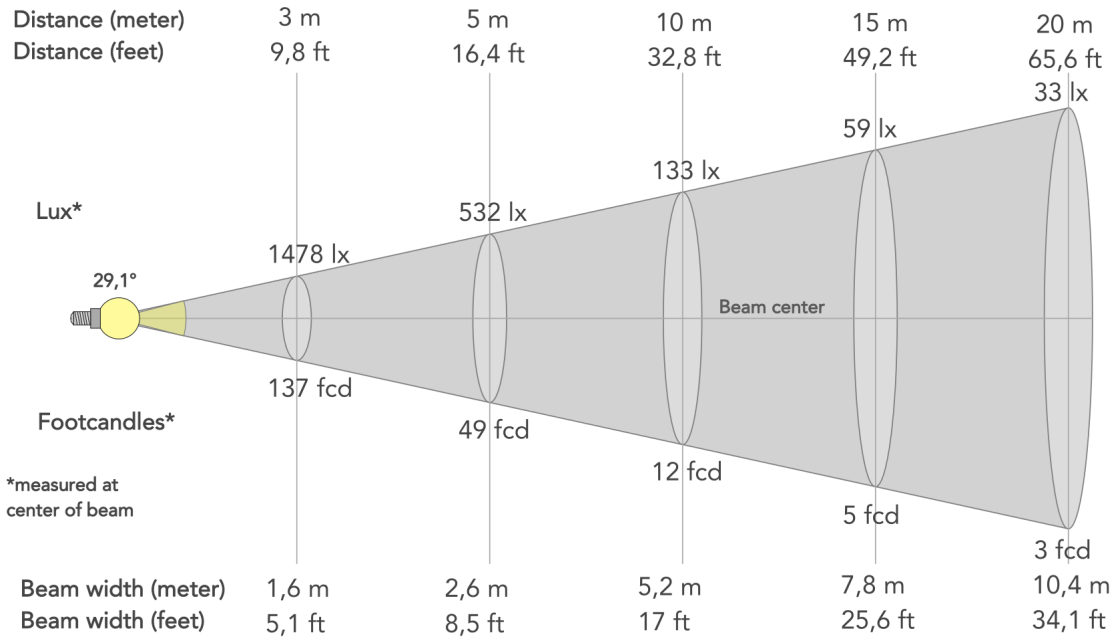

Beam angle (50%): **29.1°**	Field angle (10%): **42.9°**	Cut-off angle (2.5%): **48.8°**