Poet F6X NEW

ORDER CODE: POETF6XBK



SOURCE	ZOOM RANGE	IP RATING
250W 6 colour LEDs source	10°-80° hybrid motorised/manual zoom	IP20

WEIGHT	LUMINOUS FLUX (MAX)	CRI
6,5kg / 14.33lbs	9'263 lm	94,7 @3.200K

Downloaded on 24/11/2026 - data may be provisional: features, specifications and appearance are subject to change without notice

TECHNICAL SPECIFICATIONS

LIGHT SOURCE

Source:	250W 6 colour LEDs source
Luminous flux:	(10.1°) 4'588 lm ; (76,5°) 9'263 lm @Full
Lux:	(10.1°) 5'041 lx ; (76,5°) 622lx @5 m full
CRI:	94,7 @3.200K; 95,8 @5.600K
R9:	90,6 @3.200K; 91,6 @5.600K
TLCI:	90 @5.600K
TM30 Rf:	93,0 @3.200K; 93,6 @5.600K
TM30 Rg:	101,9 @3.200K; 104,3@5.600K
Source life expectancy:	> 50.000 hrs (L70B10 @Ta 25° C / 77° F)

OPTICS

Zoom range:	10°-80° hybrid motorised/manual zoom
Lens diameter:	150mm
Lens type:	PMMA lens
Additional optics:	PC lens available as accessory

ELECTRONICS

Dimmer:	linear 0 - 100% electronic dimmer
Dimmer curves:	5 selectable dimming modes available
Strobe / shutter:	1 - 30 Hz, electronic
Selectable PWM:	1,282 to 20,000 Hz (selectable steps)
Firmware upgrade with:	via DMX with UPBOXPRO (not included)

COLOUR SYSTEM

Spektra OS:	unmatched color precision and consistency
Colour control:	XY, CCT, RGB, RAW, Gel with Source Emulation, Tungsten emulation, HSI, User preset
CCT:	linear CCT adjustment from 1.850 K-20.000K
Tungsten Emulation:	dimming with warm color shift simulation
Tint correction:	± green correction adjustment

CONTROL

Supported Protocols:	DMX512, RDM, CRMX + WDMX (optional)
DMX channels:	From 2 to 25ch
RDM:	for remote addressing and parameter configuration
Display:	2.4'' Color display
NFC:	read/write configuration via the PROLIGHTS Tools app (coming soon)
BLE:	firmware updates, setup and control via the PROLIGHTS Tools app (coming soon)
Stand Alone:	1 push encoder
Master/Slave:	for synchronised operation of more units linked in a chain

CONNECTIONS

Power connection:	Neutrik powerCON TRUE1 IN/OUT connectors
Signal connection:	Neutrik XLR 5p IN/OUT connectors
Wireless Connection:	optional LumenRadio TiMoTwo - CRMX, CRMX² (RX only) and W-DMX compatible

ELECTRICAL

Mains power supply:	100-240V - 50/60Hz
Max power consumption (230V):	256W
Output (at 230V):	12 units on a single power line
Standby power:	10,5 W
Power factor:	> 0,94

Downloaded on 24/11/2026 - data may be provisional: features, specifications and appearance are subject to change without notice

TECHNICAL SPECIFICATIONS

PHYSICAL

IP rating:	IP20
Cooling:	heat pipe with low-noise fan
Housing:	Sturdy die-cast aluminium body
Finish:	black (RAL 9004)
Operating temperature:	Ta -10 to +45 °C (+14 to +113 °F)
Dimensions (WxHxD):	246 x 387 x 370mm
Dimensions with PO system (WxHxD):	337 x 529 x 370mm
Weight:	6,5kg

INSTALLATION

Suspension and fixing:	bracket for hanging and floor positioning
Hardware on-board:	filter frame and 8-leaf barndoor included

CERTIFICATIONS / REPORTS

Compliance:	CE

BOX CONTENT

1 x POETF6XBK

1 x POET6FFBK

1 x POET6BDBK

1 x 1,5 meters 3G1,5mmq power cable (BARE END - NEUTRIK POWERCON TRUE1 IP65 power connector)

ACCESSORIES & RELATED PRODUCTS



LRT2WK1
Wireless kit 1 with TimoTwo



ECLFRSPG
Spigot for PROLIGHTS fixtures



UPBOXPRO
Firmware uploader kit, USB IN, 5-pin XLR DMX OUT connector

TECHNICAL DRAWINGS

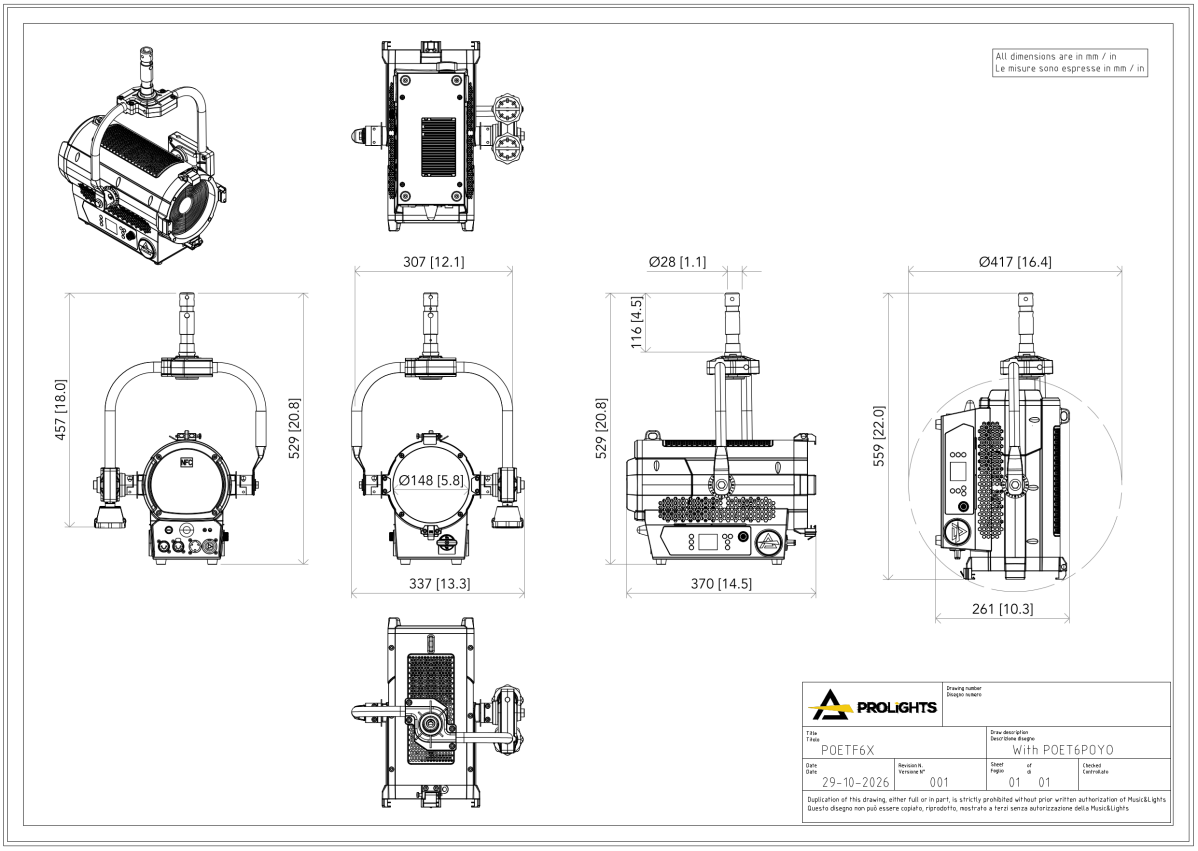

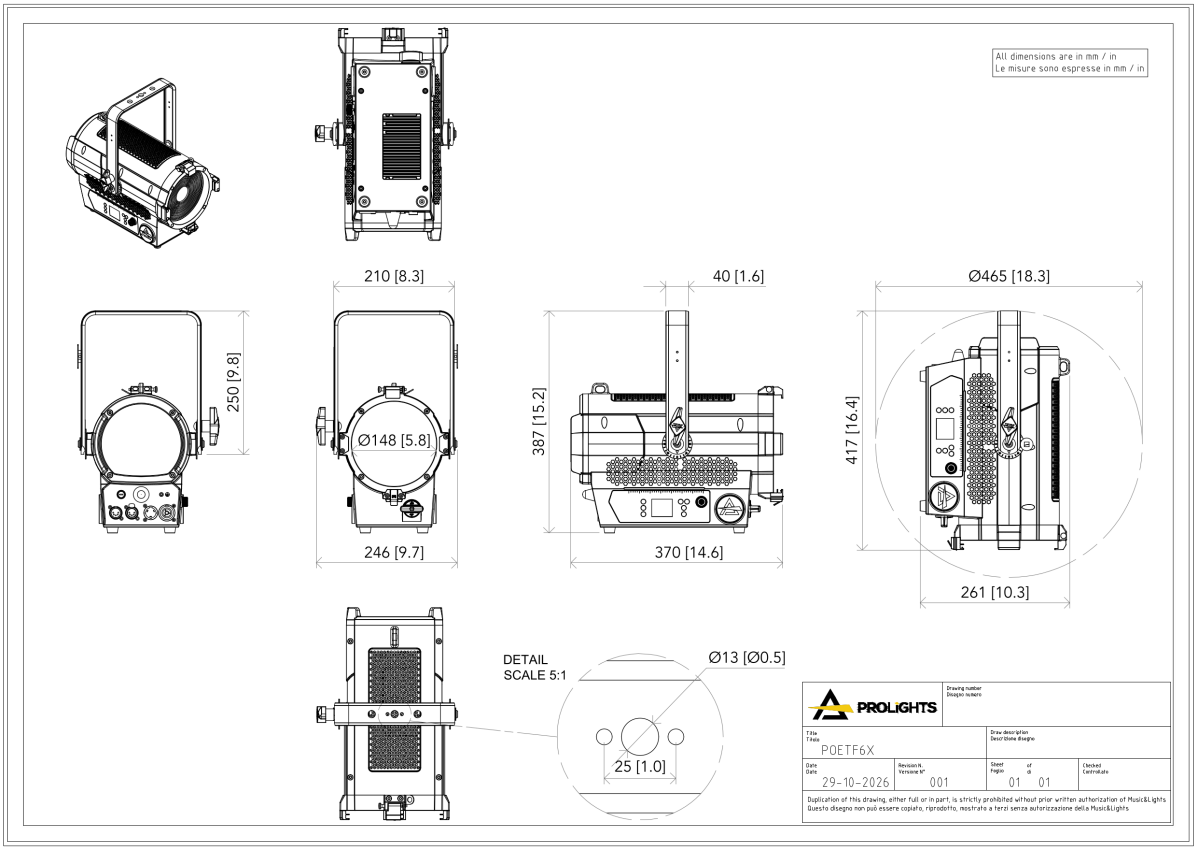

PHOTOMETRICS

Full On on - Min Zoom

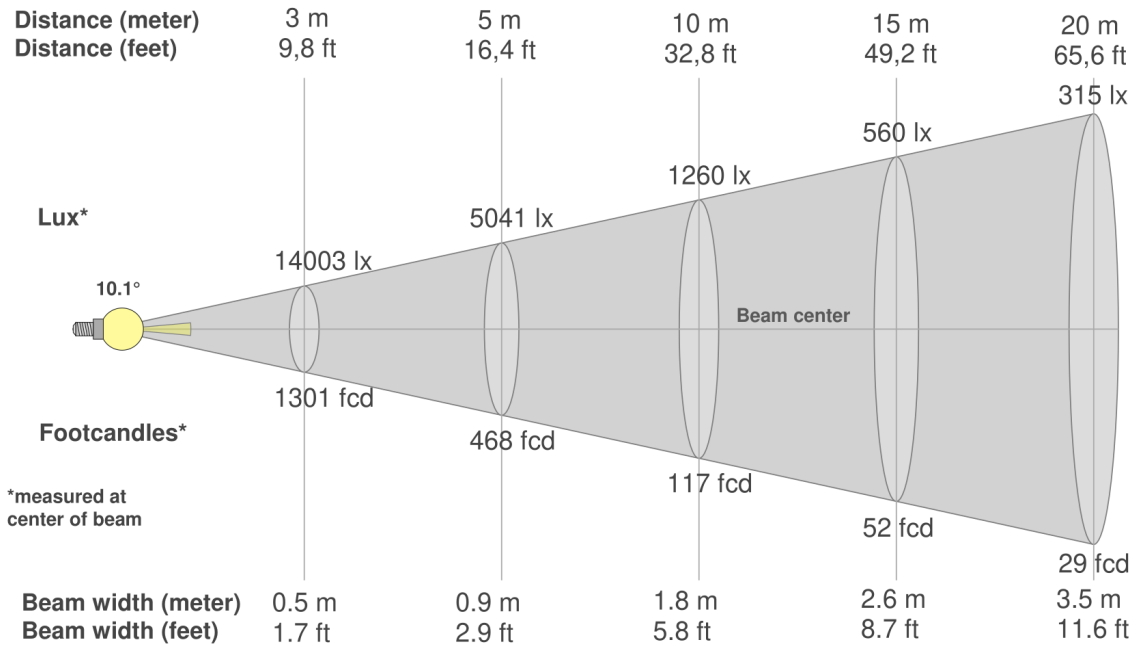

Beam angle (50%): **10.1°**	Field angle (10%): **17.2°**	Cut-off angle (2.5%): **22.8°**

Full On on - Max Zoom

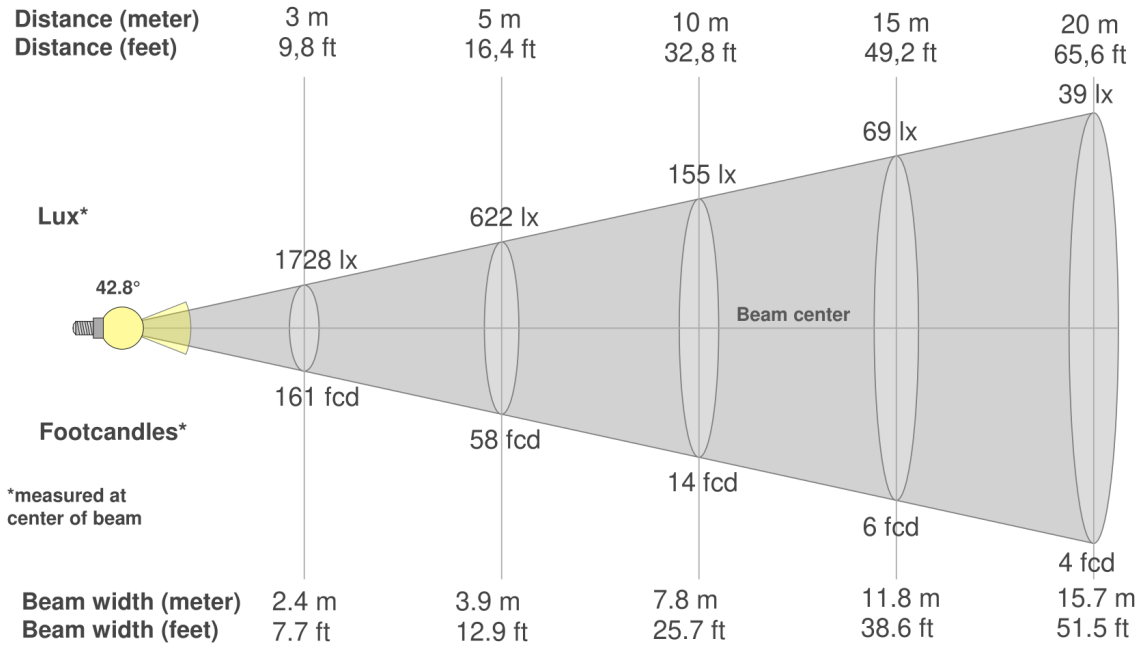

Beam angle (50%): **42.8°**	Field angle (10%): **76.5°**	Cut-off angle (2.5%): **89.8°**